© Siemens 2019



2/2 **SINAMICS V90 servo drive**
2/2 Overview
2/2 Benefits
2/3 Function
2/4 Integration
2/5 Technical specifications
2/7 Dimensional drawings

2/10 **Line filters**
2/10 Overview

2/10 **Recommended line-side overcurrent protection devices**
2/10 Overview

2/10 **External braking resistor**
2/10 Overview

2/10 **Connecting cables for SIMATIC S7 controller**
2/10 Overview

2/10 **Supplementary system components**
2/10 Overview

For **Selection and Ordering Data** please refer to section "System overview" "SINAMICS V90 basic servo drive system" from page 1/10.

Detailed technical information on SINAMICS V90 is available on the Internet at:
www.siemens.com/sinamics-v90/documentation

In addition, the Drive Technology Configurator (DT Configurator) can be used on the Internet at the following address:
www.siemens.com/dt-configurator

© Siemens 2019

Overview

SINAMICS V90 - optimized servo drive solution for motion control applications



SINAMICS V90 servo drive, 200 ... 240 V 1 AC/3 AC,
frame sizes FSA, FSB, FSC and FSD



SINAMICS V90 servo drive, 380 ... 480 V 3 AC,
frame sizes FSAA, FSA, FSB and FSC

SINAMICS V90 servo drive

SINAMICS V90 can be integrated into a wide range of applications, either using the pulse train version (pulse/direction, analog, USS/Modbus RTU) or the PROFINET version.

The SINAMICS V90 pulse train version features internal positioning, positioning with pulse train as well as speed and torque control modes.

The SINAMICS V90 PROFINET version supports PROFINET for linking the drive to an automation system via PROFIdrive profile.

With integrated real-time auto tuning and automatic suppression of machine resonances, the system automatically optimizes itself to achieve high dynamic performance and smooth operation.

For Selection and Ordering Data please refer to section "System overview" "SINAMICS V90 basic servo drive system" from page 1/10.

Benefits

Optimized servo performance

- Advanced one-button tuning and real-time auto tuning enable machines to achieve a high dynamic performance
- Automatic suppression of machine resonances
- 1 MHz high-frequency pulse train input
- Different encoder types to address the requirements of your applications

Cost-effective

- Integrated control modes: Pulse train positioning, internal positioning with traversing block or Modbus, speed and torque control modes
- Integrated internal positioning function
- Integrated braking resistor in all frame sizes with max. motor power ≥ 0.2 kW
- Integrated holding brake switch (for the 400 V version), no external relay necessary

Easy to use

- Simple connection to a control system
- Easy, all from a single source
- Easy servo tuning
- Easy machine optimization
- Easy commissioning with SINAMICS V-ASSISTANT
- Parameter cloning
- Easy integration via PTI, PROFINET, USS, Modbus RTU

Reliable operation

- High-quality motor bearings
- All motors have IP65 degree of protection and are equipped with oil seal
- Integrated safe torque off (STO)

© Siemens 2019

Function

		SINAMICS V90 Pulse train version (PTI)	SINAMICS V90 PROFINET version (PN)
Control modes			
Control modes		• Pulse train input position control (PTI) • Internal position control (IPos), setpoints selected using a combination of digital inputs, or Modbus/USS • Speed control (S) • Torque control (T) • Compound controls, switches between position control, speed control, and torque control • Jog using buttons on the integrated operator panel	• Speed control mode: position and speed control in combination with a motion function (TO axis) of SIMATIC S7-1500/S7-1200 and PROFINET • Basic positioner control (EPos)
Speed control	Speed input	External analog input or internal speed setpoint	PROFINET or internal speed setpoint
	Torque limit	External analog input or set using a parameter	PROFINET or set using a parameter
Pulse train input position control	Max. pulse frequency	• Differential line driver (5 V), 1 MHz • Optical coupler (24 V), 200 kHz	–
	Multiplying factor	Electronic gear ratio (A/B), A:1-65535, B:1-65535, 1/50<A/B<200	–
	Torque limit	External analog input or set using a parameter	–
Torque control mode	Torque input	External analog input or internal torque setpoint	–
	Speed limit	Prevents speed limits from being violated, set using a parameter for analog input	Set using a parameter
Control features			
Real time auto tuning		Estimates the machine characteristic and sets the closed-loop control parameters (gain, integral time, etc.) continuously in real time without any user intervention	
Resonance suppression		Suppresses mechanical resonance, such as workpiece and foundation vibration	
One-button auto tuning		Estimates the machine load inertia and mechanical characteristics with internal movement command (pre-configured for SINAMICS V90) This feature can be initiated using the SINAMICS V-ASSISTANT engineering tool.	
Gain switch and PI/P switch		Switches between gains or from PI to P control using an external signal or internal operating conditions	–
Torque limit		Limits motor speed using an external analog input or internal torque limit	Motor torque is internally limited
Travel to fixed stop		Can be used to move an axis to a fixed stop at a specified torque without a signal fault	
DI/DO parameterization		Freely assigns the control signals to digital inputs and digital outputs	
External braking resistor		An external braking resistor can be used when the internal braking resistor is not capable of handling the regenerative energy.	
Measure machine		The machine frequency characteristics are analyzed using SINAMICS V-ASSISTANT	
Parameter cloning and Firmware update		Optionally via memory card • For 400 V version: SD card; recommended SINAMICS SD card • For 200 V version: Micro SD card • Maximum supported capacity: 32 GB	
Safety functions		Safe Torque Off (STO) via terminal, complies with safety standard SIL 2 according to EN 61508 resp. PL d, Cat 3 according to EN ISO 13849 (activation only via terminals of SINAMICS V90, not supported via PROFINET/PROFIsafe)	
Basic Operator Panel (BOP)		Integrated, 6-digit/7-segment display, 5 buttons	
Engineering PC tool		• SINAMICS V-ASSISTANT engineering tool exclusively for SINAMICS V90 • SINAMICS V90 in combination with S7-1500 and STEP 7 Professional engineering via TIA Portal V14 possible.	

© Siemens 2019

Integration

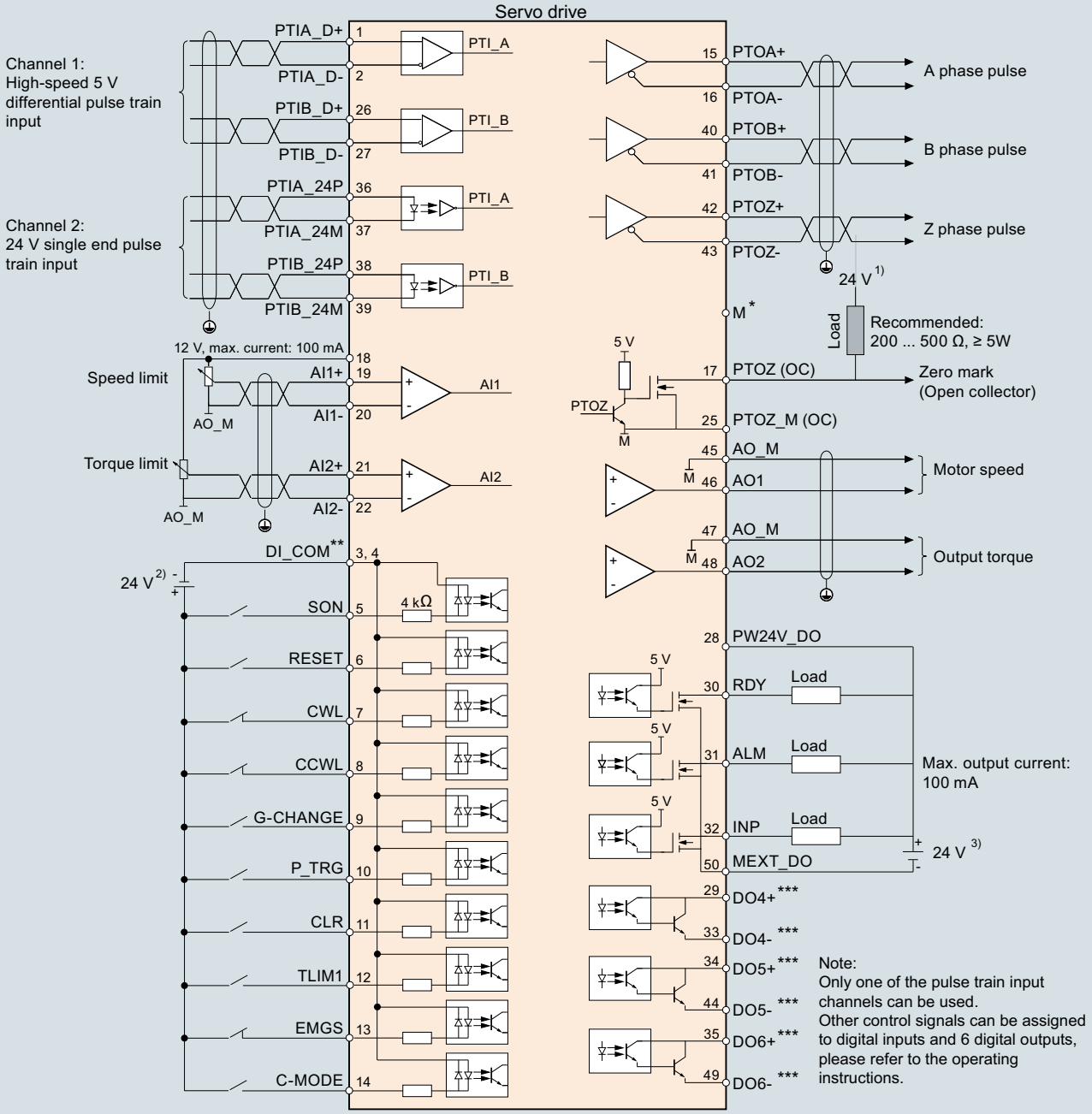

The 24 V power supplies in the connection diagram are as follows:

1) 24 V power supply for SINAMICS V90. All the PTO signals must be connected to the controller with the same 24 V power supply as SINAMICS V90.

2) Isolated digital input power supply. The controller power supply can be used.

3) Isolated digital output power supply. The controller power supply can be used.

Shielded cable

Twisted-pair wires

* PTO and PTI_D reference ground, connected to the reference ground of the host controller.

** Digital inputs, supporting both the PNP and the NPN types.

*** Digital outputs, supporting both the PNP and the NPN types. For detailed information, please refer to the operating instructions.

G_D011_EN_00463b

Standard wiring for pulse train input (PTI) position control mode (for detailed information and connection diagram for other control modes, please refer to the operating instructions).
The diagram is given as a reference for selecting the drive type.

When commissioning the selected servo drive system, establish the wiring connections according to the connection diagram and the instructions provided in the operating instructions.

© Siemens 2019

Technical specifications

General technical specifications

SINAMICS V90 servo drive	
Control power supply	
• Voltage	24 V DC (-15 %/+20 %) When SINAMICS V90 controls a motor equipped with brake, the tolerance of the 24 V DC power supply must be -10 % to +10 % to comply with the voltage required by the brake.
• Current [1]	
-without holding brake	1.6 A
-with holding brake	1.6 A + rated current motor holding brake For more information please refer to section „SIMOTICS S-1FL6 servomotors“ „Technical Data“ from page 3/3.
Line supply system	TN, TT, IT, TT earthed line
Overload capacity	300 % × rated current for 300 ms every 10 s
Control system	Servo control
Braking resistor	Integrated for all frame sizes with max. motor power ≥ 0.2 kW
Ambient temperature	
• Operation	0 ... 45 °C (32 ... 113 °F) 45 ... 55 °C (113 ... 131 °F) with derating
• Storage	-40 ... +70 °C (-40 ... +158 °F)
Ambient humidity	
• Operation	<90 % (no condensation)
• Storage	90 % (no condensation)
Pollution class	2
Vibration	
• Operation	Operational area II 10 Hz ... 58 Hz: 0.075 mm deflection 58 Hz ... 200 Hz: 1 *g* vibration
• Product packaging	2 Hz ... 9 Hz: 3.5 mm deflection 9 Hz ... 200 Hz: 1 *g* vibration Quantity of cycles: 10 per axis Sweep speed: 1 octave/min
Shock	Operational area II Peak acceleration: 5 *g*, 30 ms; 15 *g*, 11 ms Quantity of shocks: 3 per direction × 6 directions Duration of shock: 1 s
Degree of protection	IP20
Installation altitude	Up to 1000 m (3281 ft) above sea level without derating, > 1000 m ... 5000 m (> 3281 ft ... 16405 ft) with derating
Standards	CE, KC, EAC, cULus, RCM

[1] SINAMICS V90 PROFINET version requires a 24 V DC supply with max. 1.5 A (without a holding brake), or 3.5 A (with a holding brake). Refer to the operating instructions for detailed information.

© Siemens 2019

2

Technical specifications (continued)

Line voltage 200 ... 240 V 1 AC/3 AC		SINAMICS V90 servo drive						
Pulse train version:	6SL3210-5F...	B10-1UA2	B10-2UA2	B10-4UA1	B10-8UA0	B11-0UA1	B11-5UA0	B12-0UA0
PROFINET version:	6SL3210-5F...	B10-1UF2	B10-2UF2	B10-4UF1	B10-8UF0	B11-0UF1	B11-5UF0	B12-0UF0
Frame size		FSA	FSA	FSB	FSC	FSD	FSD	FSD
Max. motor power	kW	0.1	0.2	0.4	0.75	1	1.5	2
Output current								
• Rated current I_{rated}	A	1.2	1.4	2.6	4.7	6.3	10.6	11.6
• Max. current I_{max}	A	3.6	4.2	7.8	14.1	18.9	31.8	34.8
Line supply voltage		200 ... 240 V 1 AC/3 AC -15 %/+10 %	200 ... 240 V 1 AC/3 AC -15 %/+10 %	200 ... 240 V 1 AC/3 AC -15 %/+10 %	200 ... 240 V 1 AC/3 AC -15 %/+10 %	200 ... 240 V 3 AC -15 %/+10 %	200 ... 240 V 3 AC -15 %/+10 %	200 ... 240 V 3 AC -15 %/+10 %
Line frequency	Hz	50/60 -10 %/+10 %	50/60 -10 %/+10 %	50/60 -10 %/+10 %	50/60 -10 %/+10 %	50/60 -10 %/+10 %	50/60 -10 %/+10 %	50/60 -10 %/+10 %
Line supply capacity								
• 1 AC	kVA	0.5	0.7	1.2	2	–	–	–
• 3 AC	kVA	0.5	0.7	1.1	1.9	2.7	4.2	4.6
Cooling		Natural cooling	Natural cooling	Natural cooling	Natural cooling	Fan cooling	Fan cooling	Fan cooling
Dimensions								
• Width	mm (in)	45 (1.77)	45 (1.77)	55 (2.17)	80 (3.15)	95 (3.74)	95 (3.74)	95 (3.74)
• Height	mm (in)	170 (6.69)	170 (6.69)	170 (6.69)	170 (6.69)	170 (6.69)	170 (6.69)	170 (6.69)
• Depth	mm (in)	170 (6.69)	170 (6.69)	170 (6.69)	195 (7.68)	195 (7.68)	195 (7.68)	195 (7.68)
Weight, approx.	kg (lb)	1.07 (2.4)	1.07 (2.4)	1.20 (2.6)	1.94 (4.3)	2.49 (5.5)	2.49 (5.5)	2.49 (5.5)

Line voltage 380 ... 480 V 3 AC		SINAMICS V90 servo drive							
Pulse train version:	6SL3210-5F...	E10-4UA0	E10-8UA0	E11-0UA0	E11-5UA0	E12-0UA0	E13-5UA0	E15-0UA0	E17-0UA0
PROFINET version:	6SL3210-5F...	E10-4UF0	E10-8UF0	E11-0UF0	E11-5UF0	E12-0UF0	E13-5UF0	E15-0UF0	E17-0UF0
Frame size		FSAA	FSA	FSA	FSB	FSB	FSC	FSC	FSC
Max. motor power	kW	0.4	0.75	1	1.75	2.5	3.5	5	7
Output current									
• Rated current I_{rated}	A	1.2	2.1	3	5.3	7.8	11	12.6	13.2
• Max. current I_{max}	A	3.6	6.3	9	15.9	23.4	33	37.8	39.6
Line supply voltage		380 ... 480 V 3 AC -15 %/+10 %	380 ... 480 V 3 AC -15 %/+10 %	380 ... 480 V 3 AC -15 %/+10 %	380 ... 480 V 3 AC -15 %/+10 %	380 ... 480 V 3 AC -15 %/+10 %	380 ... 480 V 3 AC -15 %/+10 %	380 ... 480 V 3 AC -15 %/+10 %	380 ... 480 V 3 AC -15 %/+10 %
Line frequency	Hz	50/60 -10 %/+10 %	50/60 -10 %/+10 %	50/60 -10 %/+10 %	50/60 -10 %/+10 %	50/60 -10 %/+10 %	50/60 -10 %/+10 %	50/60 -10 %/+10 %	50/60 -10 %/+10 %
Line supply capacity	kVA	1.7	3	4.3	6.6	11.1	15.7	18	18.9
Cooling		Natural cooling	Natural cooling	Natural cooling	Natural cooling	Fan cooling	Fan cooling	Fan cooling	Fan cooling
Dimensions									
• Width	mm (in)	60 (2.36)	80 (3.15)	80 (3.15)	100 (3.94)	100 (3.94)	140 (5.51)	140 (5.51)	140 (5.51)
• Height	mm (in)	180 (7.09)	180 (7.09)	180 (7.09)	180 (7.09)	180 (7.09)	260 (10.24)	260 (10.24)	260 (10.24)
• Depth	mm (in)	200 (7.87)	200 (7.87)	200 (7.87)	220 (8.66)	220 (8.66)	240 (9.45)	240 (9.45)	240 (9.45)
Weight, approx.	kg (lb)	1.45 (3.2)	2.09 (4.6)	2.09 (4.6)	2.73 (6.0)	2.73 (6.0)	5.95 (13.1)	5.95 (13.1)	5.95 (13.1)

Interfaces	SINAMICS V90 Pulse train version (PTI)	SINAMICS V90 PROFINET version (PN)
USB	Mini USB	Mini USB
Pulse train input	2 channels, one exclusively for 5 V differential signal, one for 24 V single end signal	–
Pulse train encoder output	5 V differential signal, A, B, Z phase	–
Digital inputs/outputs	10 inputs, NPN/PNP; 6 outputs, NPN	4 inputs, NPN/PNP; 2 outputs, NPN/PNP
Analog outputs	2 analog outputs, output voltage range ± 10 V, 10 bit	–
Communication	USS/Modbus RTU (RS485)	PROFINET RT/IRT interface with 2 ports (RJ45 sockets)
SD card slot	• Standard SD card with 400 V version • Micro SD card with 200 V version	• Standard SD card with 400 V version • Micro SD card with 200 V version
Safety functions	Safe Torque Off (STO) via terminal, SIL 2	Safe Torque Off (STO) via terminal, SIL 2

© Siemens 2019

Dimensional drawings

Dimensions in mm

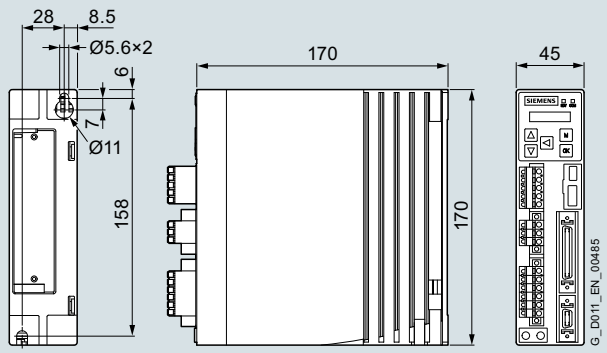

SINAMICS V90, 200 ... 240 V 1 AC/3 AC, frame size FSA

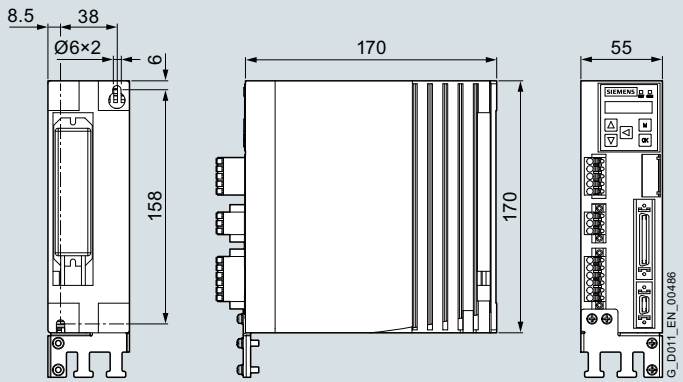

SINAMICS V90, 200 … 240 V 1 AC/3 AC, frame size FSB

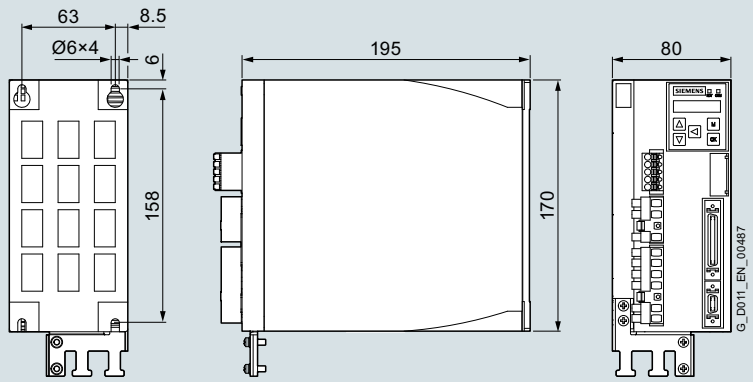

SINAMICS V90, 200 … 240 V 1 AC/3 AC, frame size FSC

© Siemens 2019

2

Dimensional drawings (continued)

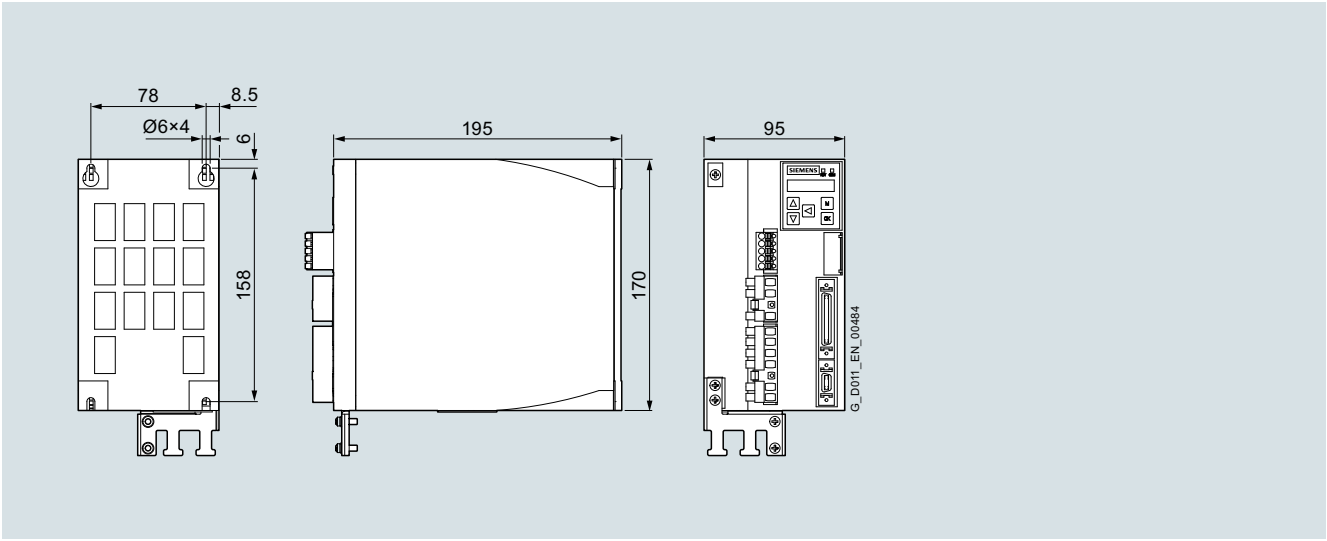

SINAMICS V90, 200 … 240 V 3 AC, frame size FSD

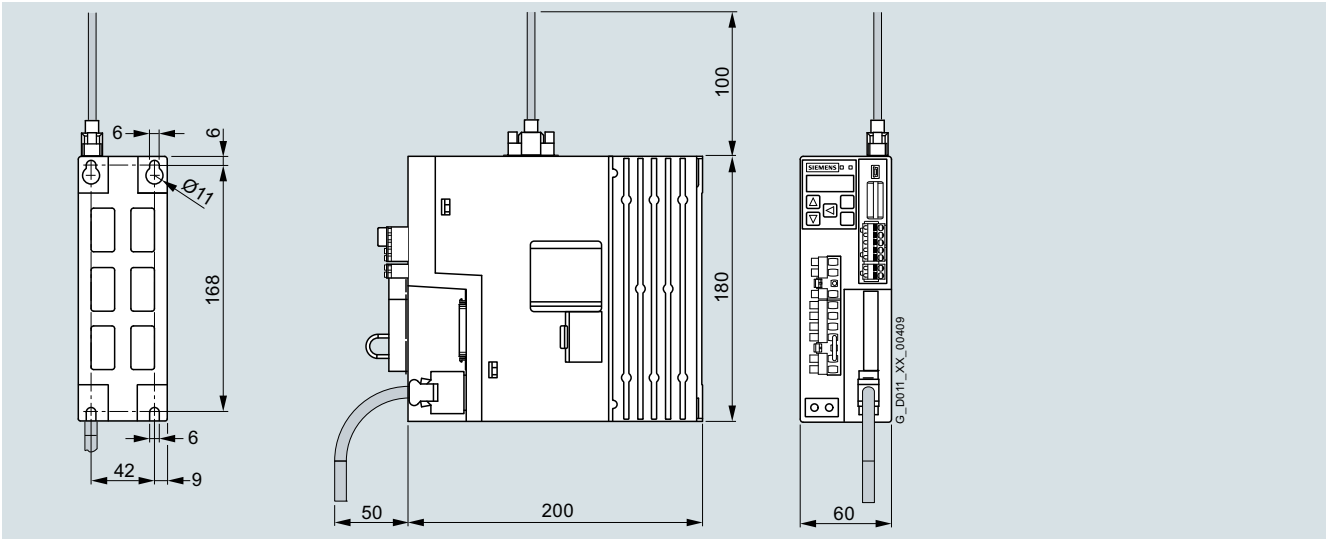

SINAMICS V90, 380 ... 480 V 3 AC, frame size FSAA

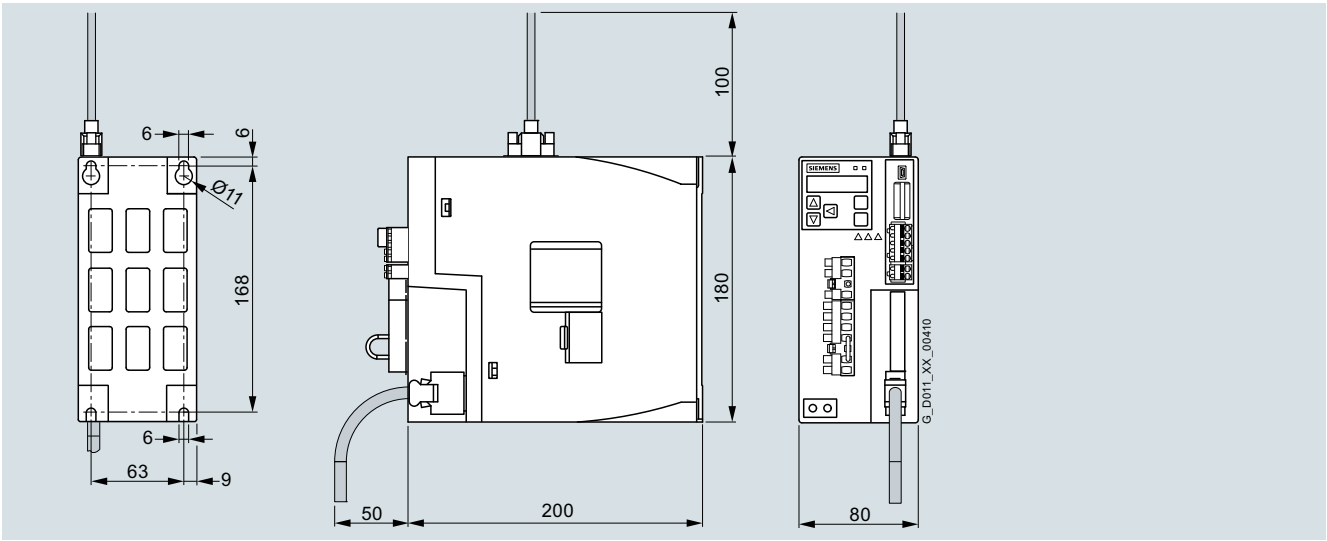

SINAMICS V90, 380 ... 480 V 3 AC, frame size FSA

© Siemens 2019

Dimensional drawings (continued)

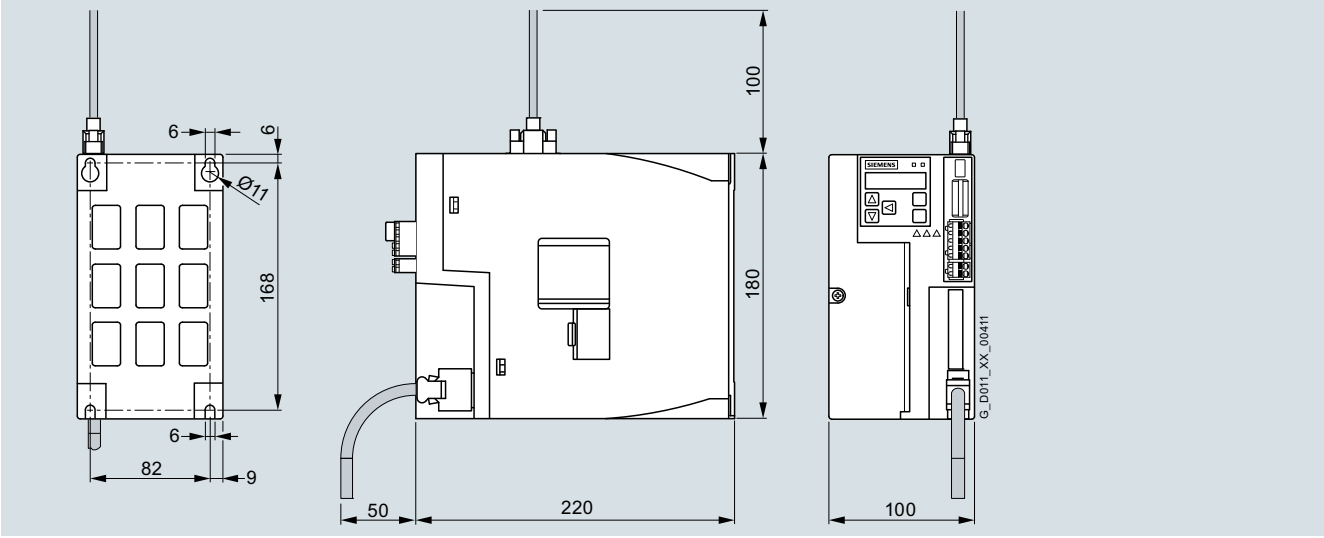

SINAMICS V90, 380 ... 480 V 3 AC, frame size FSB

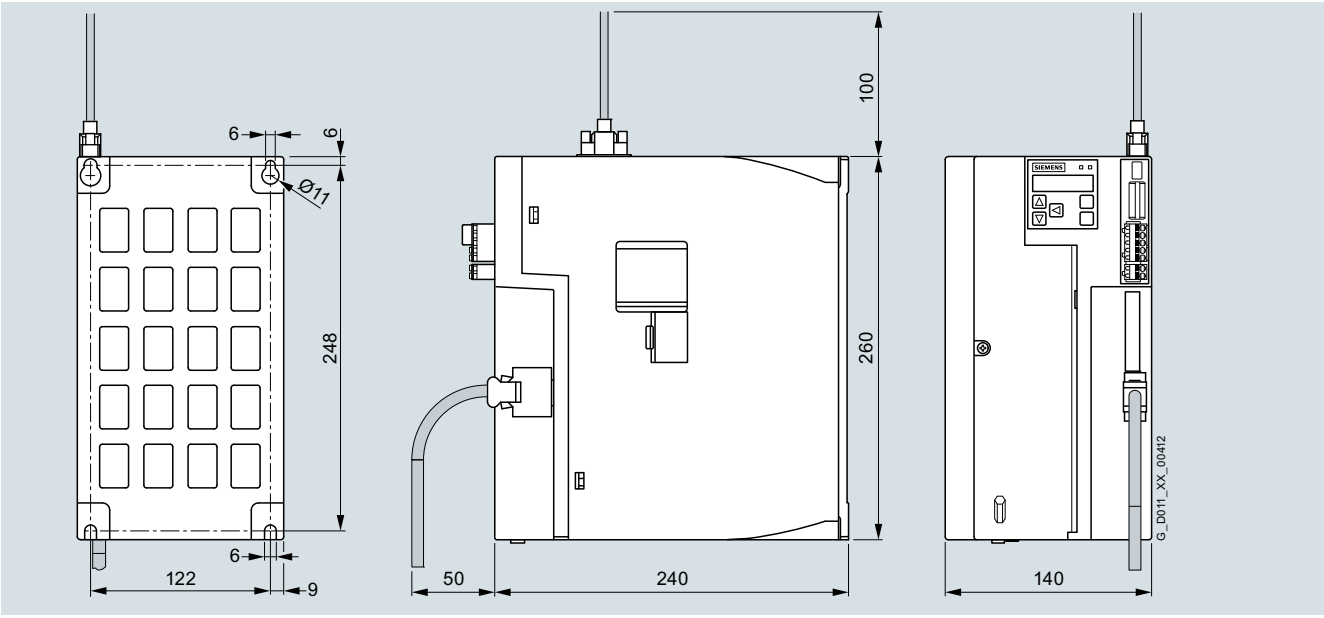

SINAMICS V90, 380 ... 480 V 3 AC, frame size FSC

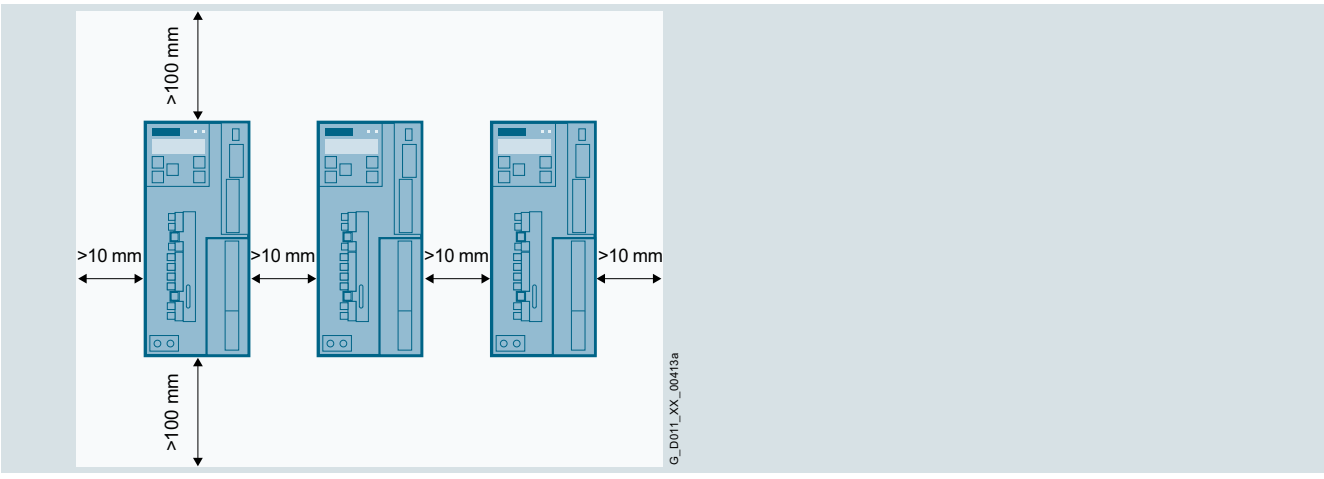

Mounting clearances

© Siemens 2019

Line filters

Overview

It is recommended to use a line filter to protect the system from high frequency noise.

With one of the recommended line filters, EN 61800-3 category C2 can be reached in combination with SINAMICS V90.

For Selection and Ordering Data please refer to section "System overview" "SINAMICS V90 basic servo drive system" from page 1/10.

Recommended line-side overcurrent protection devices

Overview

A fuse/circuit breaker can be used to protect the system.

For Selection and Ordering Data please refer to section "System overview" "SINAMICS V90 basic servo drive system" from page 1/10.

External braking resistor

Overview

When the internal braking resistor cannot meet the braking requirements, an external braking resistor can be used to transform the regenerative electrical energy into heat, thus giving greatly improved braking and deceleration capabilities.

The following table contains the technical data for selecting a standard braking resistor.

Frame size	Resistance Ω	Max. power kW	Rated power W	Max. energy kJ
Line voltage 200 ... 240 V 1 AC/3 AC				
FSA	150	1.09	20	0.8
FSB	100	1.64	21	1.23
FSC	50	3.28	62	2.46
FSD, 1 kW	50	3.28	62	2.46
FSD, 1.5 ... 2 kW	25	6.56	123	4.92
Line voltage 380 ... 480 V 3 AC				
FSAA	533	1.2	30	2.4
FSA	160	4	100	8.0
FSB	70	9.1	229	18.3
FSC	27	23.7	1185	189.6

Connecting cables for SIMATIC S7 controller

Overview

Connecting cables for SIMATIC S7 controller are available for

- SINAMICS V90 pulse train (PTI) version
- SINAMICS V90 PROFINET (PN) version

For Selection and Ordering Data please refer to section "System overview" "SINAMICS V90 basic servo drive system" page 1/14.

Supplementary system components

Overview

Memory card

Optionally an SD card can be used for SINAMICS V90 380 ... 480 V 3 AC variants to copy drive parameters or perform a firmware update. You are recommended to use the SINAMICS SD card.

Replacement connector kits

Replacement connector kits for the power and signal cables are available for SINAMICS V90.

Replacement fans

Replacement fans are available for SINAMICS V90 200 ... 240 V 3 AC frame size FSD and 380 ... 480 V 3 AC frame sizes FSB and FSC.

For Selection and Ordering Data please refer to section "System overview" "SINAMICS V90 basic servo drive system" page 1/14.