© Siemens 2019

SIMOTICS S-1FL6 servomotors for SINAMICS V90

Overview

Optimized servomotor solution for motion control applications



SIMOTICS S-1FL6 Low Inertia servomotors

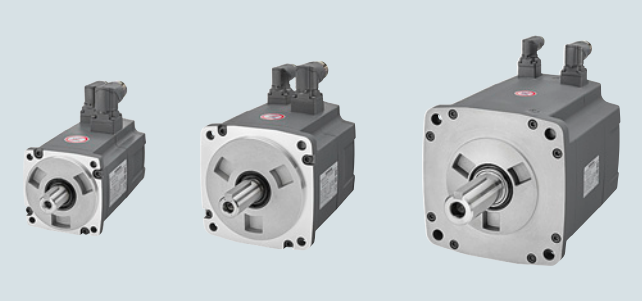

SIMOTICS S-1FL6 High Inertia servomotors

SIMOTICS S-1FL6 servomotors are permanent-magnet synchronous motors and designed for operation without external cooling. The heat is dissipated through the motor surface.

The motors have a 300 % overload capability and can be combined with the SINAMICS V90 servo drives to create a powerful servo system with high functionality. Incremental or absolute encoders can be selected depending on the application.

SIMOTICS S-1FL6 motors have a high degree of dynamic performance, wide speed control range and high shaft end and flange precision.

For Selection and Ordering Data please refer to section "System overview" "SINAMICS V90 basic servo drive system" from page 1/10.

Benefits

- High-performance magnet material
- Rugged design with IP65 degree of protection for complete motor including connectors
- Smooth running quality thanks to low torque ripple
- High rated speed for some variants
- High acceleration due to the 300 % overload capacity
- Rotatable connectors
- Maximum flexibility due to variants with incremental encoder/absolute encoder, with/without brake and plain shaft/feather key

Application

Typical applications

- Handling machines, e.g. pick & place machines
- Packaging machines, e.g. labeling machines, horizontal packaging machines
- Automatic assembly machines
- Metal forming machines
- Printing machines, e.g. screen printing machines
- Winders and unwinders

Function

SIMOTICS S-1FL6 servomotors	Low Inertia	High Inertia
Shaft height	20, 30, 40, 50	45, 65, 90
Rated torque	0.16 Nm ... 6.37 Nm	1.27 Nm ... 33.4 Nm
Rated speed	3000 rpm	2000 rpm/3000 rpm
Maximum speed	5000 rpm	4000 rpm
Encoders, integrated	• Incremental encoder 2500 S/R • Absolute encoder 21 bit single-turn • Absolute encoder 20-bit + 12-bit multi-turn *	• Incremental encoder 2500 S/R • Absolute encoder 20 bit + 12 bit multi-turn
Additional advantages	• **High dynamic performance** High acceleration for shorter cycle times as a result of the very low moment of inertia • **High speed** Maximum speed up to 5000 rpm can increase machine productivity • **Compact size** The reduced motor length/height compared to High Inertia variants and compact drive size can address critical mounting requirements.	• **Smooth operation** Higher torque accuracy and low speed ripple as a result of the higher moment of inertia ensures a better product quality. • **Robust design** High-quality metal connector and standard motor oil seal can withstand harsh environment. • **Sufficient torque output** Wide range of rated torques up to 33.4 Nm

* Absolute encoder 20-bit single-turn + 12-bit multi-turn are available for 1FL6 Low Inertia from the second half of the 2019 calendar year.

© Siemens 2019

Technical specifications

General technical specifications

	SIMOTICS S-1FL6 servomotors
Type of motor	Permanent-magnet synchronous motor
Magnet material	High-performance magnetic material
Cooling	Natural cooling
Insulation of the stator winding in accordance with EN 60034-1 (IEC 60034-1)	Temperature class 130 (B)
Temperature class	B (130 °C/266 °F)
Type of construction in accordance with EN 60034-7 (IEC 60034-7)	IM B5 (IM V1, IM V3)
Degree of protection in accordance with EN 60034-5 (IEC 60034-5)	IP65
Shaft extension in accordance with IEC 60072-1	Plain shaft/feather key (C type)
Shaft and flange accuracy in accordance with IEC 60072-1 [1]	Tolerance N
Vibration severity in accordance with IEC 60034-14	Grade A
Sound pressure level, max.	
• 1FL602	60 dB
• 1FL603	60 dB
• 1FL604	
-Low Inertia	60 dB
-High Inertia	65 dB
• 1FL605	60 dB
• 1FL606	70 dB
• 1FL609	70 dB
Ambient temperature	
• Storage/transport	-20 ... +65 °C (-4 ... +149 °F)
• Operation	
-SIMOTICS S-1FL6 Low Inertia 1FL6052-2AF.../1FL6054-2AF...	0 ... 30 °C (32 ... 86 °F) without derating
-SIMOTICS S-1FL6 Low Inertia 1FL6022/1FL6024/1FL6032/1FL6034/1FL6042/1FL6044	0 ... 40 °C (32 ... 104 °F) without derating
-SIMOTICS S-1FL6 High Inertia	0 ... 40 °C (32 ... 104 °F) without derating
Relative atmospheric humidity	
• Storage/transport	90 % at 30 °C (86 °F) (no condensation)
• Operation	90 % at 30 °C (86 °F) (no condensation)
Installation altitude	Up to 1000 m (3281 ft) above sea level without derating > 1000 m ... 5000 m (3281 ... 16405 ft) with derating
Paint finish	Black
Certificate of suitability	CE, EAC

[1] Shaft extension run-out, concentricity of centering ring and shaft, and perpendicularity of flange to shaft.

© Siemens 2019

Technical specifications (continued)

		SIMOTICS S-1FL6 Low Inertia							
		1FL6022-2AF...	1FL6024-2AF...	1FL6032-2AF...	1FL6034-2AF...	1FL6042-2AF...	1FL6044-2AF...	1FL6052-2AF...	1FL6054-2AF...
Shaft height		20	20	30	30	40	40	50	50
Rated power [1]	kW	0.05	0.10	0.20	0.40	0.75	1.00	1.50	2.00
	hp	0.07	0.14	0.27	0.54	1.02	1.36	2.04	2.72
Rated torque [1]	Nm	0.16	0.32	0.64	1.27	2.39	3.18	4.78	6.37
Rated speed	rpm	3000	3000	3000	3000	3000	3000	3000	3000
Maximum torque [1]	Nm	0.48	0.96	1.91	3.82	7.2	9.54	14.3	19.1
Maximum speed	rpm	5000	5000	5000	5000	5000	5000	5000	5000
Rated current	A	1.2	1.2	1.4	2.6	4.7	6.3	10.6	11.6
Maximum current	A	3.6	3.6	4.2	7.8	14.2	18.9	31.8	34.8
Torque constant	Nm/A	0.14	0.29	0.48	0.49	0.51	0.51	0.46	0.55
Moment of inertia									
• without brake	$10^{-4}kgm^2$	0.031	0.052	0.214	0.351	0.897	1.15	2.04	2.62
• with brake	$10^{-4}kgm^2$	0.038	0.059	0.245	0.381	1.06	1.31	2.24	2.82
Recommended load to motor inertia ratio, max.		30×	30×	30×	30×	20×	20×	15×	15×
Encoder types		• Incremental encoder TTL, 2500 S/R • Absolute encoder 21 bit single-turn							
Weight [2]									
• without brake	kg	0.47	0.63	1.02	1.46	2.8	3.39	5.45	6.66
• with brake	kg	0.70	0.86	1.48	1.92	3.68	4.20	6.96	8.20
Holding brake [3]									
Holding torque	Nm	0.32	0.32	1.27	1.27	3.18	3.18	6.37	6.37
Rated voltage	V DC	24 ±10 %	24 ±10 %	24 ±10 %	24 ±10 %	24 ±10 %	24 ±10 %	24 ±10 %	24 ±10 %
Opening time	ms	35	35	75	75	105	105	90	90
Closing time	ms	10	10	10	10	15	15	35	35
Rated current	A	0.25	0.25	0.3	0.3	0.35	0.35	0.57	0.57

		SIMOTICS S-1FL6 High Inertia						
		1FL6042-1AF...	1FL6044-1AF...	1FL6061-1AC...	1FL6062-1AC...	1FL6064-1AC...	1FL6066-1AC...	1FL6067-1AC...
Shaft height		45	45	65	65	65	65	65
Rated power [1]	kW	0.40	0.75	0.75	1.00	1.50	1.75	2.00
	hp	0.54	1.02	1.02	1.36	2.04	2.38	2.72
Rated torque [1]	Nm	1.27	2.39	3.58	4.78	7.16	8.36	9.55
Rated speed	rpm	3000	3000	2000	2000	2000	2000	2000
Maximum torque [1]	Nm	3.8	7.2	10.7	14.3	21.5	25.1	28.7
Maximum speed	rpm	4000	4000	3000	3000	3000	3000	3000
Rated current	A	1.2	2.1	2.5	3.0	4.6	5.3	5.9
Maximum current	A	3.6	6.3	7.5	9.0	13.8	15.9	17.7
Torque constant	Nm/A	1.1	1.2	1.5	1.7	1.6	1.7	1.7
Moment of inertia								
• without brake	$10^{-4}kgm^2$	2.7	5.2	8.0	11.7	15.3	22.6	29.9
• with brake	$10^{-4}kgm^2$	3.2	5.7	9.1	13.5	16.4	23.7	31.0
Recommended load to motor inertia ratio, max.		10×	10×	5×	5×	5×	5×	5×
Encoder types		• Incremental encoder TTL, 2500 S/R • Absolute encoder 20 bit single-turn + 12 bit multi-turn						
Weight [2]								
• without brake	kg	3.4	5.2	5.7	7.0	8.4	11.1	13.7
• with brake	kg	4.8	6.6	8.8	10.1	11.5	14.2	16.8
Holding brake [3]								
Holding torque	Nm	3.5	3.5	12.0	12.0	12.0	12.0	12.0
Rated voltage	V DC	24 ±10 %	24 ±10 %	24 ±10 %	24 ±10 %	24 ±10 %	24 ±10 %	24 ±10 %
Opening time	ms	60	60	180	180	180	180	180
Closing time	ms	45	45	60	60	60	60	60
Rated current	A	0.9	0.9	1.5	1.5	1.5	1.5	1.5

[1] Rated torque, rated power and maximum torque listed in the table above allow for a production tolerance of 10 %.

[2] Motor weight with incremental encoder.

[3] It is not permissible to use the holding brake for an emergency stop.

© Siemens 2019

Technical specifications (continued)

		SIMOTICS S-1FL6 High Inertia			
		1FL6090-1AC...	1FL6092-1AC...	1FL6094-1AC...	1FL6096-1AC... [4]
Shaft height		90			
Rated power [1]	kW	2.5	3.5	5	7
	hp	3.40	4.76	6.80	9.52
Rated torque [1]	Nm	11.90	16.70	23.90	33.40
Rated speed	rpm	2000	2000	2000	2000
Maximum torque [1]	Nm	35.7	50.0	70.0	90.0
Maximum speed	rpm	3000	3000	2500	2000
Rated current	A	7.8	11.0	12.6	13.2
Maximum current	A	23.4	33.0	36.9	35.6
Torque constant	Nm/A	1.6	1.6	2.0	2.7
Moment of inertia					
• without brake	$10^{-4}kgm^2$	47.4	69.1	90.8	134.3
• with brake	$10^{-4}kgm^2$	56.3	77.9	99.7	143.2
Recommended load to motor inertia ratio, max.		5×			
Encoder types		• Incremental encoder TTL, 2500 S/R • Absolute encoder 20 bit single-turn + 12 bit multi-turn			
Weight [2]					
• without brake	kg	15.4	19.8	24.4	33.3
• with brake	kg	21.5	25.9	30.5	39.3
Holding brake [3]					
Holding torque	Nm	30.0			
Rated voltage	V DC	24 ±10 %			
Opening time	ms	220			
Closing time	ms	115			
Rated current	A	1.9			

[1] Rated torque, rated power and maximum torque listed in the table above allow for a production tolerance of 10 %.

[2] Motor weight with incremental encoder.

[3] It is not permissible to use the holding brake for an emergency stop.

[4] For SIMOTICS S-1FL6096-... servomotors with brake, when the ambient temperature exceeds 30 °C (86 °F), the power should be derated by 10 %. Power derating is not required for other motors.

© Siemens 2019

Characteristic curves

Torque-speed characteristic for SIMOTICS S-1FL6 Low Inertia when connected to SINAMICS V90

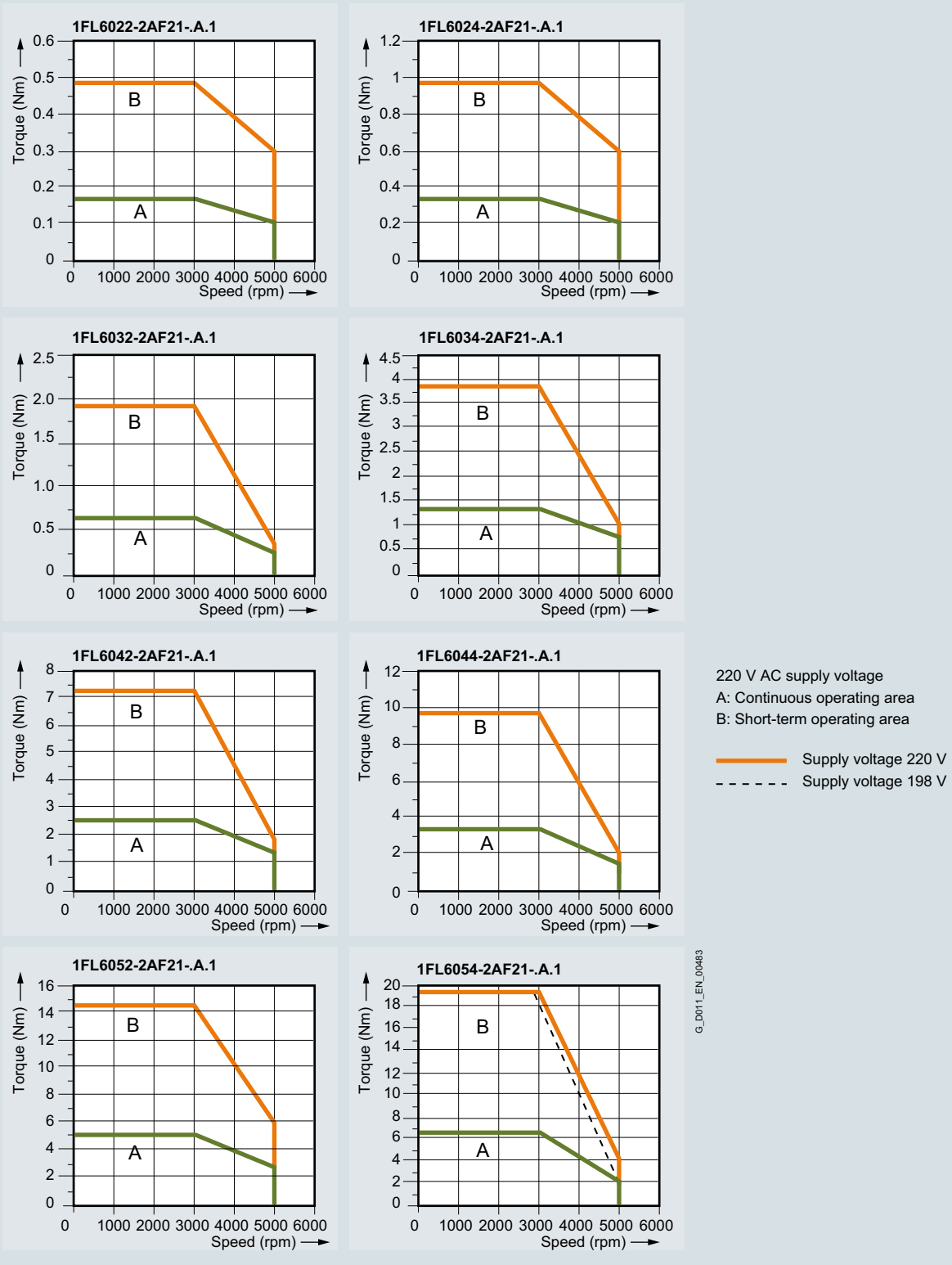

© Siemens 2019

Characteristic curves (continued)

Torque-speed characteristic for SIMOTICS S-1FL6 High Inertia when connected to SINAMICS V90

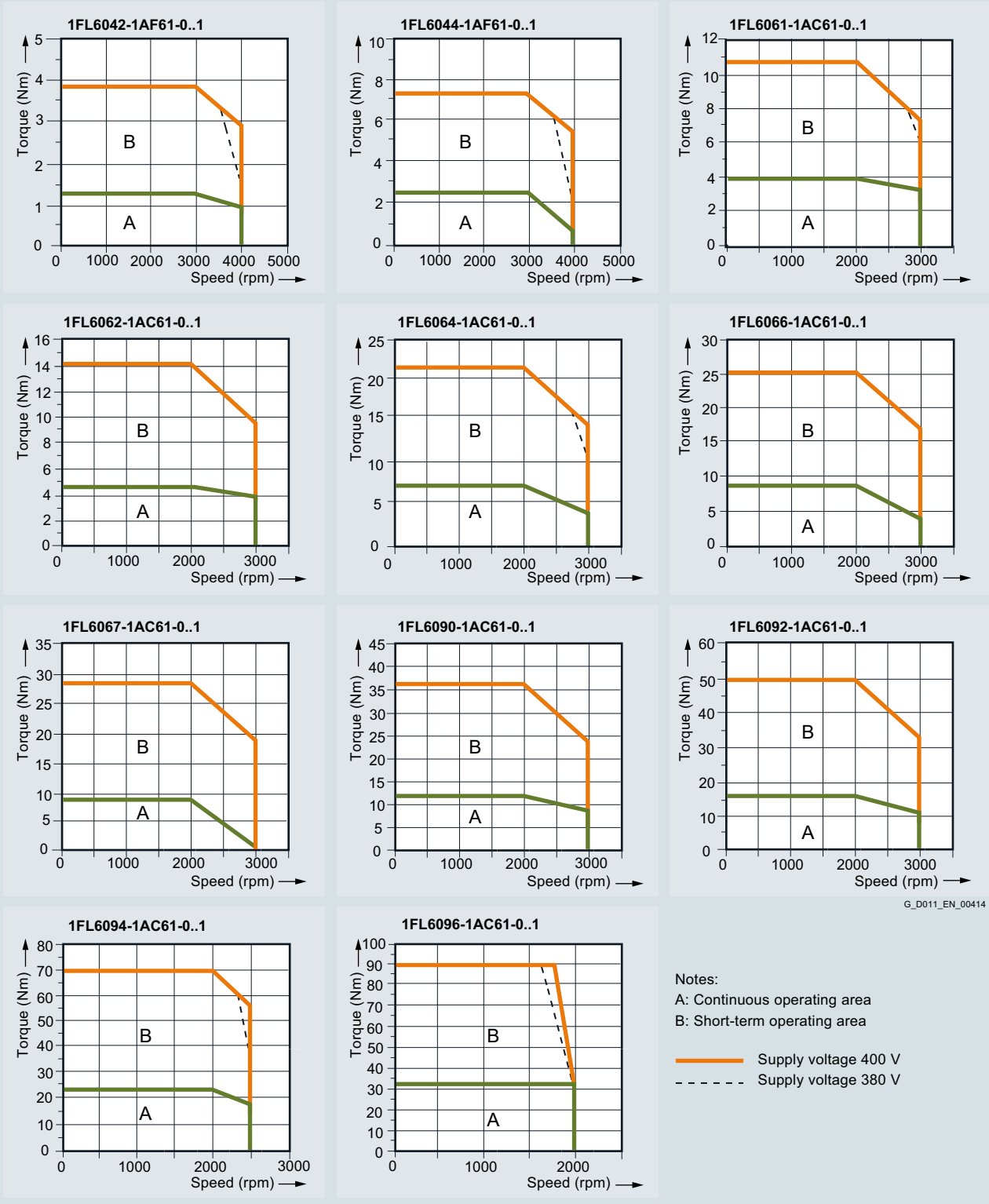

© Siemens 2019

Dimensional drawings

SIMOTICS S-1FL6 Low Inertia

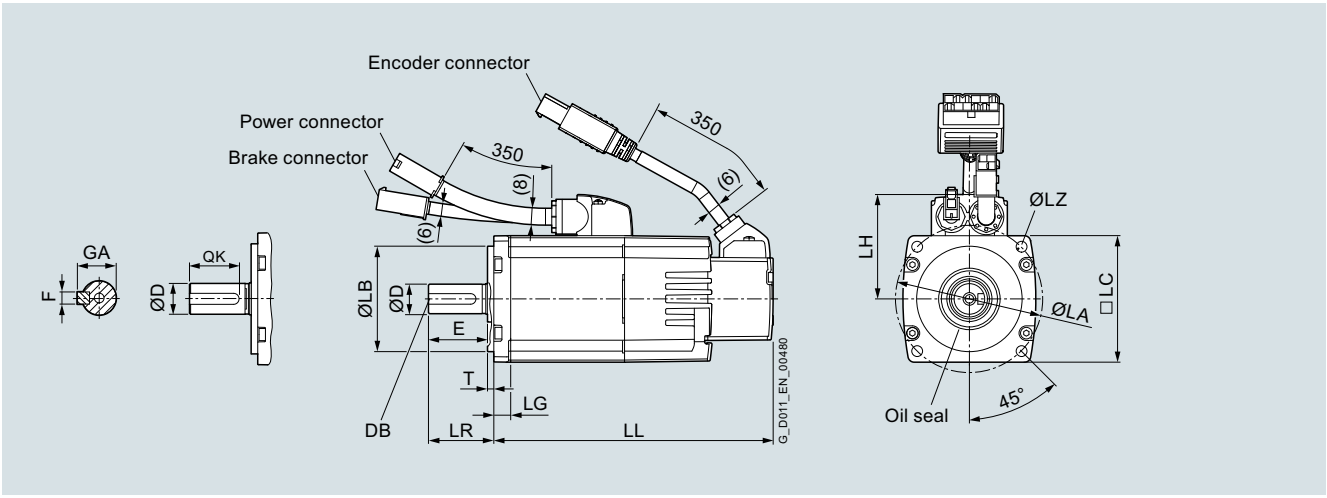

SIMOTICS S-1FL6 Low Inertia servomotors, shaft heights 20, 30, 40

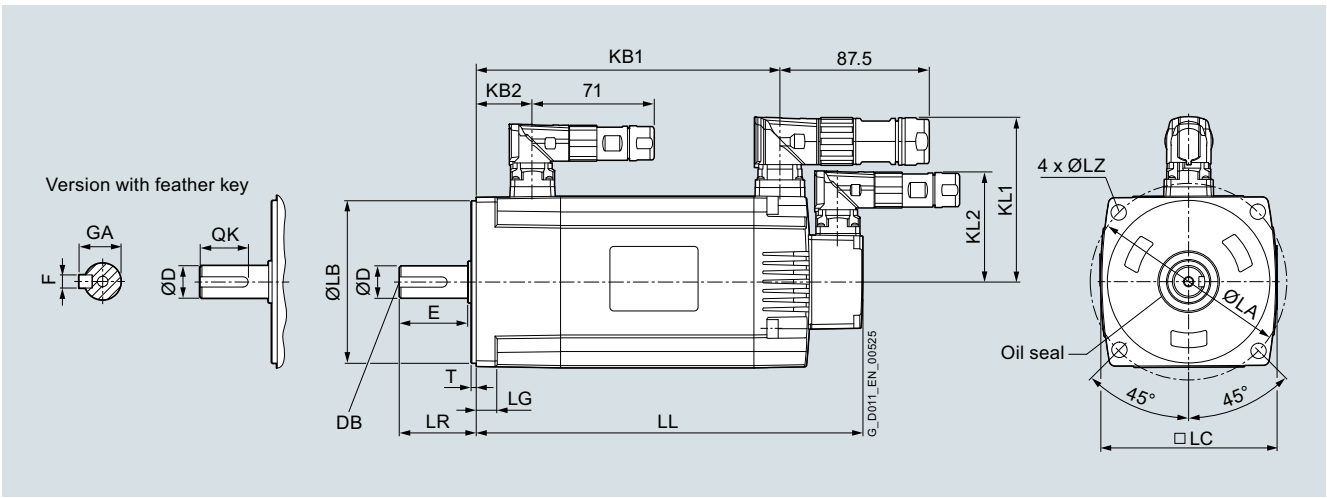

SIMOTICS S-1FL6 Low Inertia servomotor, shaft height 50

For motor		Dimensions in mm																				
										DE shaft extension						Without brake		With brake				
Shaft height	Type	LC	LA	LZ	LB	LH	LR	T	LG	D	DB	E	QK	GA	F	LL	KB1	LL	KB1	KB2	KL1	KL2
SIMOTICS S-1FL6 Low Inertia, natural cooling, without/with brake																						
20	1FL6022-2AF	40	46	4.5	30	40	25	2.5	6	8	M3×8	22	17.5	9	3	86	–	119	–	–	–	–
	1FL6024-2AF	40	46	4.5	30	40	25	2.5	6	8	M3×8	22	17.5	9	3	106	–	139	–	–	–	–
30	1FL6032-2AF	60	70	5.5	50	50	31	3	8	14	M4×15	26	22.5	16	5	98	–	132.5	–	–	–	–
	1FL6034-2AF	60	70	5.5	50	50	31	3	8	14	M4×15	26	22.5	16	5	123	–	157.5	–	–	–	–
40	1FL6042-2AF	80	90	7	70	60	35	3	8	19	M6×16	30	28	21.5	6	139	–	178.3	–	–	–	–
	1FL6044-2AF	80	90	7	70	60	35	3	8	19	M6×16	30	28	21.5	6	158.8	–	198.1	–	–	–	–
50	1FL6052-2AF	100	115	9	95	–	45	3	12	19	M6×16	40	28	21.5	6	192	143.5	226	177.5	32.5	98	65.5
	1FL6054-2AF	100	115	9	95	–	45	3	12	19	M6×16	40	28	21.5	6	216	167.5	250	201.5	32.5	98	65.5

Motor rating plate (example)

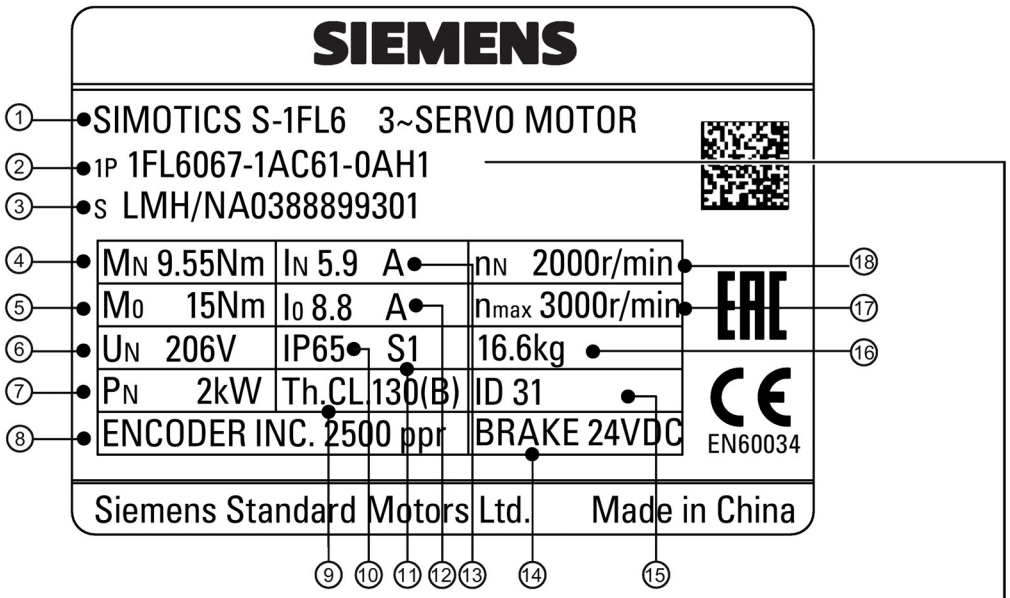

1FL6 06 7 -1A C 6 1 - 0 A H 1

Shaft height

Low inertia:
02: 20 mm
03: 30 mm
04: 40 mm
05: 50 mm

High inertia:
04: 45 mm
06: 65 mm
09: 90 mm

Rated torque

Low inertia:
2: 0.16 Nm, SH20
0.64 Nm, SH30
2.39 Nm, SH40
4.78 Nm, SH50
4: 0.32 Nm, SH20
1.27 Nm, SH30
3.18 Nm, SH40
6.37 Nm, SH50

High inertia:
0: 11.9 Nm, SH90
1: 3.58 Nm, SH65
2: 1.27 Nm, SH45
4.78 Nm, SH65
16.7 Nm, SH90
4: 2.39 Nm, SH45
7.16 Nm, SH65
23.9 Nm, SH90
6: 8.36 Nm, SH65
33.4 Nm, SH90
7: 9.55 Nm, SH65

Inertia type
1: High inertia
2: Low inertia

Rated speed
C: 2000 rpm
F: 3000 rpm

Supply voltage
2: 200V
6: 400V

Connection type
0: Straight connectors with fixed outlet direction
1: Cable outlet

Encoder type
A: Incremental encoder TTL 2500 ppr
M: Absolute encoder single-turn 21-bit
L: Absolute encoder 20-bit + 12-bit multi-turn

Mechanics
G: Plain shaft, without brake
H: Plain shaft, with brake
A: Shaft with key (half-key balancing), without brake
B: Shaft with key (half-key balancing), with brake

Degree of protection
1: IP65, with shaft oil seal

①	Motor type	⑦	Rated power	⑬	Rated current
②	Order number	⑧	Encoder type and resolution	⑭	Holding brake
③	Serial number	⑨	Thermal class	⑮	Motor ID
④	Rated torque	⑩	Degree of protection	⑯	Weight
⑤	Stall torque	⑪	Motor operating mode	⑰	Maximum speed
⑥	Rated voltage	⑫	Stall current	⑱	Rated speed