KOGANEI

Catalog No. BK-C0042

http://www.koganei.co.jp

NEW Products

Slit Type Rodless Cylinder with Integrated Guide

ORB Series

Built-in guide mechanism
Lightweight ➡ 55% less mass
Compact! ➡ 41% narrower
*** ORB compared with the previous ORS10.**

New series ϕ20 [0.787] and ϕ25 [0.984]!

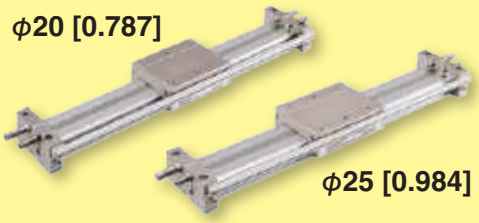

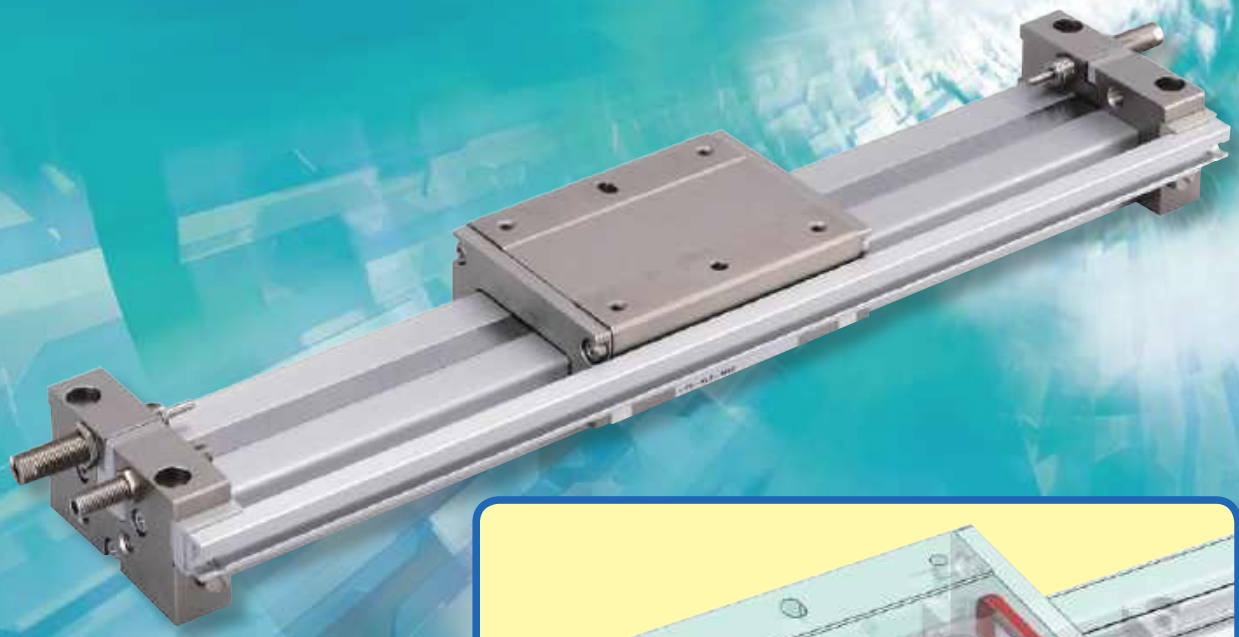

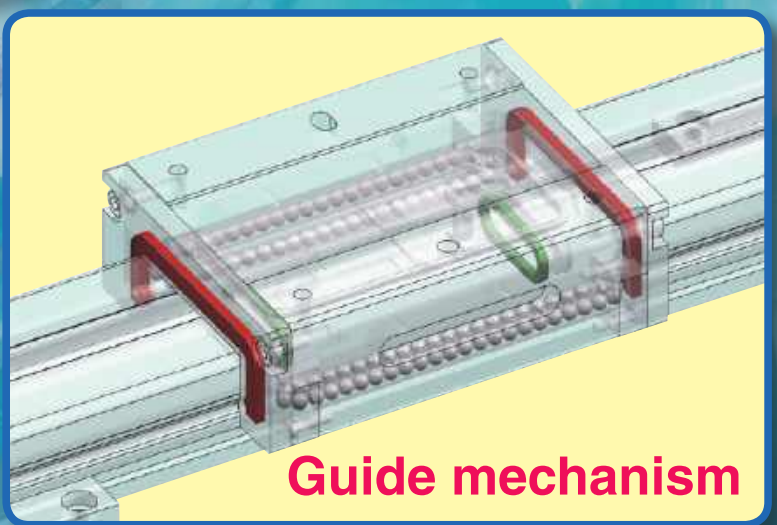

RoHS compliant product

Slit Type Rodless Cylinder with Integrated Guide

ORB Series

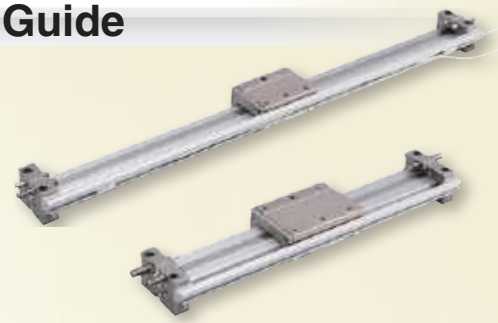

Built-in guide mechanism
Lightweight, Compact with High-rigidity

Built-in guide mechanism

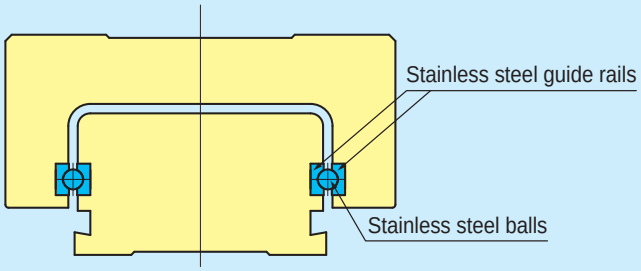

Four models available:
ϕ10 [0.394], ϕ16 [0.630], ϕ20 [0.787], and ϕ25 [0.984] cylinder sizes

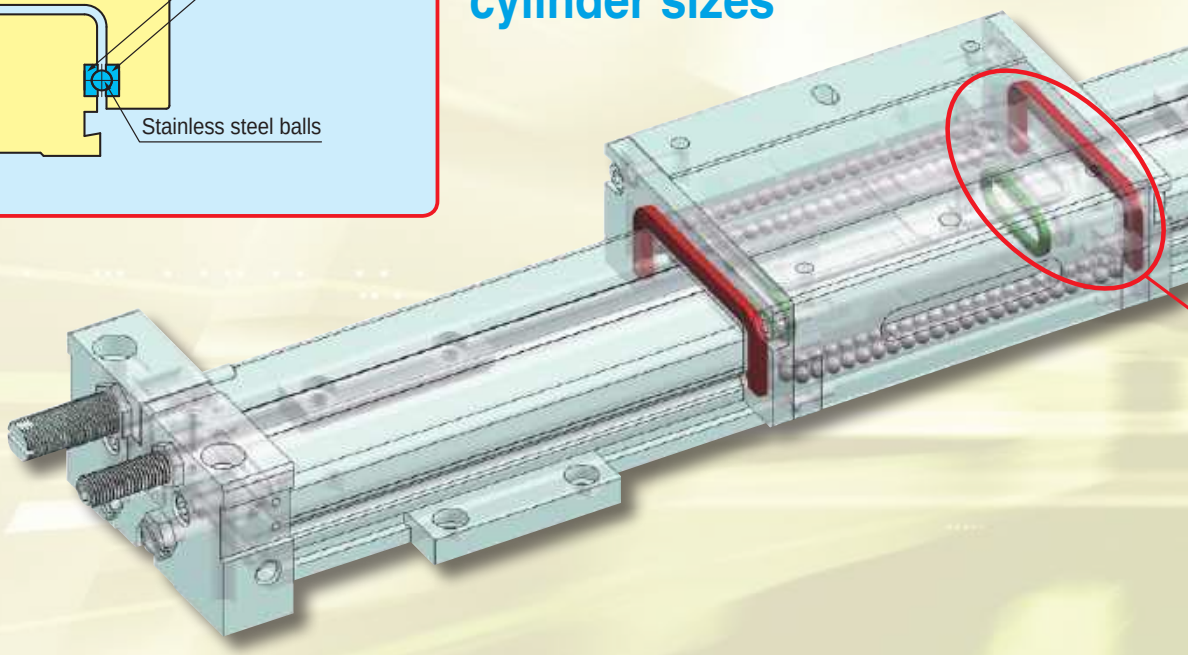

Lightweight!

* Comparison of 100 mm [3.94 in] stroke

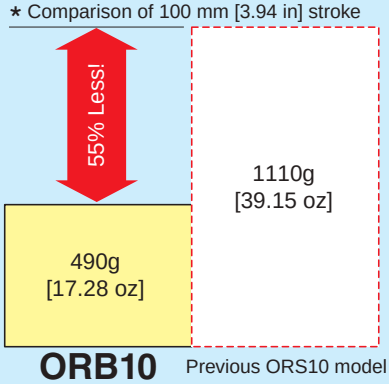

Compact!

Installation space greatly reduced

* Comparison of 100 mm [3.94 in] stroke

Width is 41% smaller! Total length is 23% shorter!

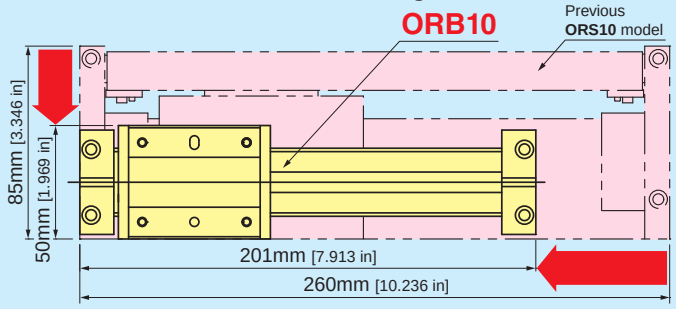

CAUTION Read the safety precautions on page ❸ before using this product.

Wide range of speeds

Minimum operating speed 30 mm/s [1.18 in/sec]
(50 mm/s [1.97 in/sec] with H1 grease specifications)
Maximum operating Speed 1000 mm/s [39.4 in/sec]
Capable of operating at high speeds, a feature of rodless cylinders, as well as stable operation at low speeds.

Select from our H1 grade food equipment specifications

NSF H1 grade food equipment specifications are available.

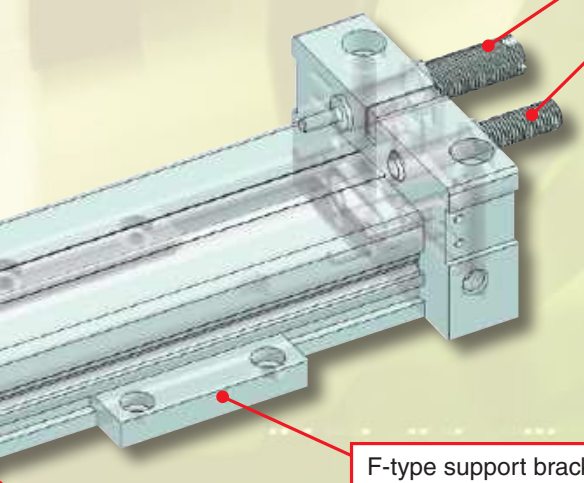

F-type support bracket (option)

Lubrication retention mechanism

Long life

Mechanism that keeps dust out and lubrication in improves durability to about double that of the existing product (ORS).

Excellent parallel running

Parallelism of slider when running at maximum 500 mm [19.69 in] stroke shown in table below.

Running parallelism	Between surfaces A and C	0.05 [0.0020]
	Between surfaces B and D	0.03 [0.0012]

Values in the table indicate a fixed installation, on a surface with 0.02 mm [0.0008 in] flatness, using F supports on the entire installation surface of the cylinder barrel.

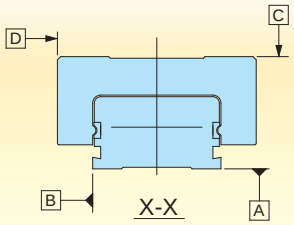

Select from 3 types of stoppers

Shock absorbers, rubber stoppers, and metal stoppers are available to match your application.

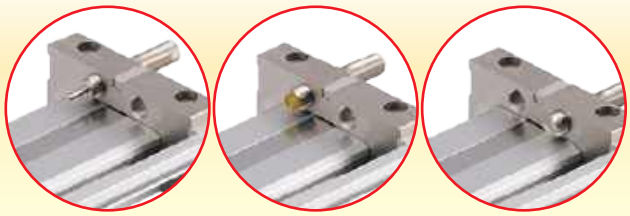

Shock absorber Rubber stopper Metal stopper

Shock absorbers and metal stoppers can be used together

The metal stopper is used to fix the positioning so there is no mis-positioning when adjusting or changing the shock absorber.

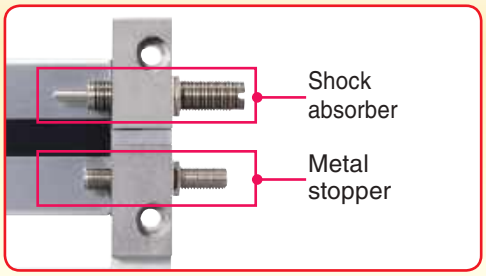

Two-color LED sensor switches can be mounted

Possible to mount two-color LED sensor switches which can be easily positioned and adjusted.
Appropriate operation range can be determined by the color of the LED indicator. For details, see page 24.



All piping can be on one side

ORB series allows all piping to be on one side (one end only).

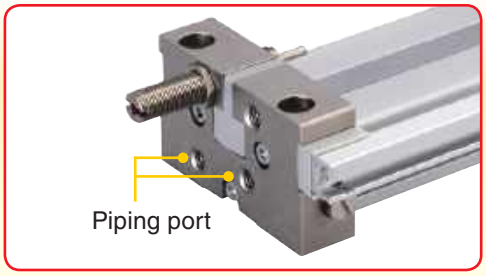

INDEX

Features ····· 1
Safety Precautions ····· 3
Handling instructions and precautions ····· 6
Specifications ····· 11
Order codes ····· 14
Inner Construction and Major Parts and Materials ····· 17
Dimensions ····· 18
Sensor switches ····· 23

Safety Precautions (ORB Series)

Always read these precautions carefully before use.

Before selecting and using the products, please read all the safety precautions carefully to ensure proper product use.
The safety precautions described below are to help you use the product safely and correctly, and to prevent injury or damage to you, other people, and assets.
Follow the safety precautions for: ISO4414 (Pneumatic fluid power - General rules and safety requirements for systems and their components) and JIS B 8370 (General rules relating to pneumatic systems).

The directions are ranked according to degree of potential danger or damage: "DANGER", "WARNING", "CAUTION", and "ATTENTION".

⚠ DANGER	Indicates situations that can be clearly predicted as dangerous. Death or serious injury may result if the situation is not avoided. It could also result in damage or destruction of assets.
⚠ WARNING	Indicates situations that, while not immediately dangerous, could become dangerous. Death or serious injury may result if the situation is not avoided. It could also result in damage or destruction of assets.
⚠ CAUTION	Indicates situations that, while not immediately dangerous, could become dangerous. Failure to avoid the situation creates the risk of minor or semi-serious injury. It could also result in damage or destruction of assets.
⚠ ATTENTION	While there is little chance of injury, this content refers to points that should be observed for appropriate use of the product.

■ This product was designed and manufactured for use in general industrial machinery.

- ■ When selecting and handling equipment, the system designer or another person with sufficient knowledge and experience should always read the safety precautions, catalog, instruction manual and other literature before commencing operation. Improper handling is dangerous.
- ■ After reading the Instruction Manual, catalog, and other documentation, always store them in a location that allows easy availability for reference to users of this product.
- ■ Whenever transferring or lending the product to another person, always attach the instruction manual, and other information, to the product where they are easily visible in order to ensure that the new user can use the product safely and properly.
- ■ The danger, warning, and caution items listed under these safety precautions do not cover all possible contingencies. Read the catalog and instruction manual carefully, and always keep safety first.

⚠ DANGER

- ● Do not use the product for the purposes listed below:
  1. Medical equipment related to maintenance or management of human lives or bodies
  2. Machines or equipment designed for the purpose of moving or transporting people
  3. Critical safety components in mechanical devices

  This product has not been planned or designed for purposes that require high levels of safety. Using the product in any of the ways described above creates the risk of loss of human life.
- ● Do not use the product in locations with or near dangerous substances such as flammable or ignitable substances. This product is not explosion-proof. Doing so creates the risk of ignition and fire.
- ● When mounting the product and workpiece, always make sure they are firmly supported and secured in place. Falling, dropping, or abnormal operation of the product creates the risk of personal injury.
- ● Persons using a pacemaker or other similar medical devices should maintain a distance of at least one meter [3.28 ft] away from the product. Getting too close to the product creates the risk of malfunction of a pacemaker due to the strong magnet built into the product.
- ● Never attempt to modify the product in any way. Doing so creates the risk of injury, electric shock, fire, etc. due to abnormal operations.
- ● Never attempt inappropriate disassembly, assembly or repair of the product relating to basic construction, or to its performance or to functions. Doing so creates the risk of injury, electric shock, fire, etc.
- ● Do not splash water on the product. Spraying water on the product, washing the product, or using the product under water creates the risk of malfunction, leading to injury, electric shock, fire, etc.
- ● While the product is in operation, avoid touching it with your hands or otherwise approaching too close. Also, do not attempt to make any adjustments to internal or attached mechanisms (shock absorbers, stroke adjustment mechanisms, sensor switch mounting location, disconnection of piping tubes or plugs, etc.) while the product is in operation. This may cause an unintended cylinder movement resulting in injury.
- ● When operating the product, always install speed controllers, and gradually loosen the needle valve from a choked state to adjust the increase in speed.
  Failure to make this adjustment could result in the air supply causing sudden movements, which may put human lives at risk.

⚠ WARNING

- ● Do not use the product in excess of its specification range. Doing so creates the risk of product breakdown, loss of function, or damage. It could also drastically reduce operating life.
- ● Before supplying air or electricity to the device and before starting operation, always conduct a safety check of the area where the machine is operating. Unintentional supply of air or electricity creates the risk of electric shock or injury due to contact with moving parts.
- ● Do not touch terminals or switches while power is turned on. Doing so creates the risk of electric shock and abnormal operation.
- ● Do not allow the product to be thrown into fire.
  Doing so creates the risk of the product exploding or the release of toxic gases.
- ● Do not sit on the product, place your foot on it, or place other objects on it.
  Doing so creates the risk of injury due to tripping or the product tipping over or falling, resulting in product damage and abnormal, erratic, or runaway operation.
- ● Before conducting maintenance, inspection, repair, replacement, or any other similar procedure, always completely cut off all air supply and confirm that residual pressure inside the product or in piping connected to the product is zero.
  In particular, be aware that residual air will still be in the air compressor or air storage tank. The cylinder may move abruptly, if residual air pressure remains inside the piping, causing injury.
- ● Do not use the cylinder as a device to absorb the shock or vibration of machinery. Doing so may create the risk of injury or the breakdown of the machinery.
- ● Do not allow lead wires of sensor switches or other cords to become damaged.
  Allowing a cord to become damaged, bent excessively, pulled, rolled up, placed under heavy objects, or squeezed between two objects creates the risk of current leaks or defective continuity that can lead to fire, electric shock, or abnormal operation.
- ● Do not apply external magnetic field to sensor switches while the cylinder is in motion. Unintended operations could damage equipment or cause injury.
- ● If vibrations or the sound of impact is abnormally high, the shock absorber may have reached the end of its service life,

replace it if that is the case.
Continued use of the product creates the risk of product destruction or damage, resulting in mis-operation, runaway operation, etc.

- Use the product within the recommended load and specified operating speed. Using the cylinder in excess of the recommended load and specified operating speed could damage the cylinder causing destruction of equipment or injury.
- Use safety circuits or design a system that prevents damage to machinery and personal injury when the machine is shut down due to an emergency stop or electrical power failure.
- Install relief valves or other devices to ensure that the cylinder does not exceed its rated pressure when the pressure is increased by external forces on the cylinder. Excessive pressure could lead to a breakdown and damage.
- When the product has been idle for over 48 hours or has been in storage, it is possible that the contacting parts may have become stuck leading to operating delays or sudden movements. Before these initial operations, always run a test to check that operating performance is normal.
- Do not use the product near the ocean, in direct sunlight, near mercury vapor lamps, or near equipment that generates ozone. Deterioration of rubber parts caused by ozone may reduce performance and functions or stop functions.
- Because Koganei products may be used under a wide variety of conditions, decisions concerning conformance with a particular system should be made upon the careful evaluation by the person in charge of system design. Assurances concerning expected system performance and safety are the responsibility of the designer who decides system conformity. Be sure to use the latest catalogs and technical materials to study and evaluate specification details, to consider the possibility of machine breakdown, and to configure a system that ensures fail-safe safety and reliability.
- Do not use the product in locations subject to direct sunlight (ultraviolet radiation), in locations with dust, salt, or iron particles, or in locations with media and/or ambient atmosphere that include organic solvents, phosphate ester type hydraulic oil, sulfur dioxide gas, chlorine gas, acids, etc. Such uses could lead to loss of functions within a short period, sudden degradation in performance, or reduced operating life. For details on materials used in the product, refer to the description of materials used in major parts.

⚠ CAUTION

- When installing the product, be sure to allow adequate work space around it. Failure to do so will make it more difficult to conduct daily inspections or maintenance, which could eventually lead to system shutdown or damage to the product.
- When transporting or mounting a heavy product, firmly support the product using a lift or support, or use multiple people to ensure personal safety.
- Do not bring any magnetic media or memory within one meter [3.28 ft] of the product. Doing so creates the risk of damage to data on the magnetic media due to magnetism.
- Do not use the sensor switch in locations subject to large electrical currents or strong magnetic fields. It could result in erratic operation.
  Also avoid using magnetic material for any parts used for mounting. Doing so creates the risk of magnetism leakage that causes malfunctions.
- Do not bring the product too close to magnetic bodies. Positioning it near a magnetic body or strong magnetic field will cause erratic operation of sensor switches due to magnetization of the main body and slider, or cause failure by adherence of iron powder, etc.
- Use only specified sensor switches with these products.
  Not doing so may cause malfunctions or runaway operation.
- Do not scratch, dent, or deform the actuator by climbing on the product, using it as a step, or placing objects on top of it. Doing so creates the risk of damage to or breakage of the product, resulting in operational shutdown or degraded performance.
- Always be sure to post a "Work in Progress" sign during installation, adjustment, or other operations, to avoid unintended supply of pneumatic or electric power. Unintended power or air supply can cause electric shock and sudden cylinder movement, creating the risk of personal injury.
- Do not subject any cords, such as the sensor switch lead wires, to excessive loads by pulling on them, lifting the product by them, or placing heavy objects on them. Doing so may cause current leakage or defective continuity leading to fire, electric shock, or abnormal operation.
- Using extremely dry air with a dew point lower than –20 °C [–4 °F], may affect the quality of the lubricating oil used. This creates the risk of degraded performance, loss of function, or other problems.
- The product uses internal lubrication, so some lubricant may leak from the piping ports.
- Be sure to thoroughly wash your hands if they come in contact with the oil or grease used in the shock absorber. Smoking while there is oil or grease on your hands may result in the oil or grease getting on the tobacco and burning, which presents the risk that toxic gases may be produced.

⚠ ATTENTION

- Whenever considering use of this product in situations or environments not specifically noted in the catalog or in manuals, or in applications where safety is an important requirement such as in aircraft facilities, combustion equipment, leisure equipment, safety equipment, and other places where human life or assets may be greatly affected, take adequate safety precautions such as allowing plenty of margin for ratings and performance, or fail-safe measures.
  Contact the sales department at Koganei regarding use in such applications.
- Always check the catalog and other reference materials for product wiring and piping.
- Use a protective cover and other means to ensure that the operating parts of mechanical devices are isolated and do not come into direct contact with human bodies.
- Do not configure controls that would allow workpieces to fall if power fails.
  Configure the control system to prevent workpieces or sliders from falling if the machinery stops during an emergency stop or power outage.
- When handling the product, wear protective gloves, safety glasses, safety shoes, and other protective clothing whenever necessary.
- When the product can no longer be used or is no longer necessary, dispose of it appropriately as industrial waste. Incinerating the special oil in the shock absorber generates fluorine (HF), which is corrosive and toxic. Because of this, incineration must be done in an acid-resistant incinerator equipped with neutralizing equipment. For large amounts, ask a registered waste disposal company.
- Pneumatic equipment can exhibit degraded performance and function over its operating life. Always conduct daily inspections of the pneumatic equipment, and confirm that all requisite system functions are satisfied, to prevent accidents from happening.
- For inquiries about the product, consult your nearest Koganei sales office or Koganei Overseas Department. The addresses and telephone numbers are shown on the back cover of this catalog.

⚠ Other

- Always observe the following items.
  Koganei bears no responsibility if they are not fully observed.
  1. When using this product in pneumatic systems, always use genuine Koganei parts or compatible parts (recommended parts).
  Use only authentic Koganei parts or compatible parts (recommended parts) to do maintenance or repairs.
  Always observe the prescribed methods and procedures.
  2. Never inappropriately disassemble or modify the product in relation to its basic construction, performance, or functions.

Koganei shall not be held responsible for any problems that occur as a result of these safety precautions not being properly observed.



Design and selection

⚠ WARNING

1. Check the specifications.
Read the specifications carefully to ensure correct use within the product's specified voltage, current, temperature, and shock ranges, failure to do so could result in a breakdown or defective operation.

2. Be careful when mounting cylinders in close proximity to each other.
Mounting two or more cylinders with sensor switches in close proximity may result in erratic operation of the sensor switches due to magnetic field interference.

3. Be careful of how long the sensor switch is on when detecting the position in mid-stroke.
Be aware that, when the sensor switch is mounted at an intermediate point of the cylinder stroke to detect the passing of the piston, if the piston is moving too fast, the length of time the sensor switch operates is too short to detect the piston passing (so loads such as programmable controllers are not operated).
The highest detectable cylinder speed is

$$V \begin{matrix} \text{mm/s} \\ \text{[in/s]} \end{matrix} = \frac{\text{Sensor switch operating range mm [in]}}{\text{Time required for load operation [ms]}} \times 1000$$

4. Keep wiring as short as possible.
Lead wires for solid state sensor switches should be within 30 m [98.4 ft] as stipulated by EN standards. For reed sensor switches, longer wiring (10 m [32.8 ft] or longer) will lead to a larger capacitive surge, which reduces the operating life of sensor switches. When longer wiring cannot be avoided, provide the protective circuit described in the catalog.
If the load is inductive or capacitive, provide the appropriate protective circuit as described in the catalog.

5. Avoid repeated bending or excessive pulling of lead wires.
Applying repeated bending stress or tension force on the lead wires could break them.

6. Pay attention to leakage current.
With 2-lead wire solid-state sensor switches, current (leakage current) flows to the load to activate the internal circuit even when turned off. Ensure that the circuit satisfies the following inequality.
Input current of programmable controller > Leakage current
If the above inequality cannot be satisfied, select a 3-lead wire solid state sensor switch. And, if n sensor switches are connected in parallel, the leakage current increases by n times.

⚠ CAUTION

1. Check for internal voltage drop of sensor switches.
Connecting reed sensor switches with indicator lamps, or 2-lead wire solid state sensor switches, in series causes increasing internal voltage drop and the load may fail to activate. Connecting n pieces of switches will drop the internal voltage by n times as much.
Ensure that the circuit satisfies the following inequality:
Supply voltage – Internal voltage drop x n > Minimum operating voltage of the load
In relays with rated voltage of less than 24 VDC, check that the above inequality is satisfied even when n=1.
If the above inequality cannot be satisfied, select a reed sensor switch without an indicator lamp.

2. Do not use Koganei sensor switches with other companies' cylinders.
The sensor switches are designed for use with Koganei cylinders only. They may not function correctly if used with other companies' cylinders.



Installation and adjustment

⚠ WARNING

1. Do not apply an external magnetic field to the sensor switch while the cylinder is in operation.
This may cause unintended operation, thereby damaging the device or causing injury.

⚠ CAUTION

1. Be aware of the environment in which you install the sensors and cylinders.
Do not use the sensor switch in locations subject to large electrical currents or strong magnetic fields. It could result in erratic operation.
Also avoid using magnetic material for any parts used for mounting. It could result in erratic operation.

2. Install sensor switches in the center of their operating range.
Adjust the mounting position of a sensor switch so that the piston stops in the center of its operating range (the range while the sensor is ON). Operations will be unstable if mounted at the end of the operating range (at the boundary near on and off). Also be aware that the operating range will vary with changes in temperature.

3. Follow the tightening torque guidelines for mounting sensor switches.
Over-tightening beyond the allowed tightening torque may damage the mounting threads, mounting brackets, sensor switches and other components. However, insufficient tightening torque may cause the sensor switch position to change, resulting in unstable operation. Follow the instructions on page ㉗ concerning the tightening torque.

4. Do not carry the cylinder by its mounted sensor switch's lead wires.
After mounting a sensor switch on the cylinder, do not carry the cylinder by grabbing the lead wires. Never do this, as it may damage not only the lead wires but may also apply stress to the inside of the sensor switch that may damage internal elements.

5. Do not drop the sensor switches or bump them against other objects.
While handling sensor switches, do not subject them to excessive shock (294.2 m/s^2 [30 G] or larger) by hitting, dropping or bumping them.
In the case of reed sensor switches, such behavior may cause the contact to malfunction, thereby giving a signal output or turning off the signal instantaneously. And, this may change the contact interval, thereby deteriorating the sensor switch's sensitivity. As such, this may cause the device to malfunction. Even if the sensor switch case is not damaged, the inside of the sensor switch may be damaged, causing erratic operation.



Wiring

⚠ DANGER

1. Prevent nearby moving objects from coming into contact with sensor switches.
When cylinders equipped with sensor switches are moving or when moving objects are nearby, do not let them come into contact with each other. In particular, lead wires may become worn or damaged causing unstable operation of the sensor switch. In the worst case, this may result in current leaks or electrical shock.

2. Always turn off the power before doing wiring work.
Doing wiring work while the power is on may result in electric shock. Also, incorrect wiring could damage the sensor switch in an instant. Turn on the power only after the wiring work is complete.

⚠ WARNING

1. Check the catalog and other materials to ensure that the sensor switch is wired correctly.
Incorrect wiring may result in abnormal operation.

2. Do not share wiring with power or high voltage lines.
Avoid wiring in parallel to or in the same conduit with power lines and high-voltage lines. Noise from such wiring could cause the sensor switch and control circuit to suffer erratic operation.

3. Avoid repeated bending or excessive pulling of lead wires.
Applying repeated bending stress or tension force on the lead wire may result in wire breakage.

4. Check the wiring polarity.
Be sure that the wiring connections are correct for sensor switches that specify polarity (+, –, output). Incorrect polarity could result in damage to sensor switches.

⚠ CAUTION

1. Avoid short circuiting loads.
Turning on the sensor switch while the load is short-circuited causes overcurrent, which will damage the sensor switch in an instant.
Example of short-circuit load: Sensor switch's output lead wire is directly connected to the power supply.

2. Position sensor switches in the center of their operating range.
Sensor switch operations may be unstable, depending on the operating environment, if positioned at the edge of the operating range.

3. Solid state sensor switches that are compliant with the EMC standards (EN61000-6-2 and EN60947-5-2) are not resistant to surges from lightning. Use countermeasures on the machine to protect them from lightning surges.

4. Use an internal element to absorb surges for direct activation of loads that generate surges.

Handling instructions and precautions



General precautions

Air supply

1. Use air as the medium. For the use of any other medium, consult your nearest Koganei sales office.

2. Air to operate the ORB series rodless cylinder should be clean air that contains no degraded compressor oil, etc. Install an air filter (filtration of 40 μm or less) near the ORB series rodless cylinder or valve to remove dust and accumulated liquid. Also drain the air filter periodically. If liquid or dust gets into the ORB series rodless cylinder, it may cause defective operation.

Piping

1. Before installing piping to the ORB series rodless cylinder, thoroughly flush the inside of the pipes with compressed air. Machining chips, sealing tape, rust and other debris remaining from the piping work may result in air leaks and malfunctions.

2. When screwing pipes or fittings into the ORB series rodless cylinder, use the appropriate tightening torque shown below:

Connecting thread	Tightening torque N・m [ft・lbf]
M5×0.8	1 to 1.5 [0.74 to 1.11]
Rc1/8	7 to 9 [5.16 to 6.64]

Atmosphere

1. Cover the unit when using it in locations where it might be subject to excessive dust, dripping water, dripping oil, etc.

2. This product cannot be used if the medium or ambient atmosphere includes any of the substances below. Organic solvents, phosphate type hydraulic oil, sulfur dioxide gas, chlorine gas, or acids.

3. Do not do welding work near the ORB series rodless cylinder. Sparks from welding may damage the outer seal band.

Lubrication

The ORB series rodless cylinders can be used without lubrication. If lubrication is required, contact your nearest Koganei sales office. Do not use turbine oil.

Other

1. The ORB series rodless cylinders can be installed in any orientation, but if they are being used in locations subject to excessive dust, dripping water, dripping oil, or other materials, face the slider down or protect it with a cover. Specifically, it is effective to install cylinders so the seal band is facing down.

2. Do not do electric welding work while installing or after installing the ORB series rodless cylinder. If the welding current flows along the cylinder, it may arc, and damage or leave a deposition on the cylinder.

3. Be careful to not dent or scratch the cylinder barrel or the outer seal band.

4. If the cylinder barrel and outer seal band are likely to get dirty where the product is being used, clean them periodically. After cleaning, be sure to apply grease to the surface of the cylinder barrel and the outer seal band. Be sure to contact Koganei if you are going to apply grease.

Warranty and General Disclaimer

1. Warranty Period
The warranty period for Koganei products is 180 days from the date of delivery.

2. Scope of Warranty and General Disclaimer

(1) The Koganei product warranty covers individual products. When a product purchased from Koganei or from an authorized Koganei distributor or agent malfunctions during the warranty period in a way that is attributable to Koganei 's responsibility, Koganei will repair or replace the product free of charge. Even if a product is still within the warranty period, its durability is determined by its operation cycles and other factors. Contact your nearest Koganei sales office or the Koganei overseas department for details.

(2) Koganei is not responsible for any losses or for any damages to other machinery caused by breakdown, loss of function, or loss of performance of Koganei products.

(3) Koganei is not responsible for any losses due to use or storage of the product in a way that is outside of the product specifications prescribed in Koganei catalogs and instruction manuals, and/or due to actions that violate the mounting, installation, adjustment, maintenance or other safety precautions.

(4) Koganei is not responsible for any losses caused by breakdown of the product due to factors outside the responsibility of Koganei, including but not limited to fire, natural disaster, the actions of third parties, and intentional actions or errors by the purchaser.

Installing, stroke adjustment, piping

Installing

1. Install the product on a surface that is within 0.02 mm [0.0008 in] of flatness.
   The cylinder can be installed in any orientation, but if the surface is not flat, it may cause backlash and play and increased rolling resistance, which could have a bad effect on the life of the cylinder.
2. Be careful not to dent or scratch the surface on which the cylinder barrel and slider are being installed.
   Otherwise, it could ruin the parallelism of the installation surface and the top of the slider.
3. Be careful not to dent or scratch the cylinder barrel or the rail track of the slider.
   Such conditions can cause backlash and play and increased rolling resistance.
4. Be careful to avoid strong impact and excessive moment when mounting workpieces.
   Such conditions can cause backlash and play and increased rolling resistance.
5. Be sure that the mounting screws for each part of the ORB series cylinders are strong enough.
6. In cases where loosening of screws due to impact and/or vibration may be a factor, consider looseness prevention measures.
7. If the cylinder barrel, outer seal band, and rail track are likely to get dirty where the product is being used, clean them periodically. After cleaning, be sure to apply grease to the surface of the cylinder barrel, outer seal band, and rail track.
   For information about the type of grease to apply, contact Koganei.
8. Do not dent or scratch the cylinder barrel or the outer seal band.
   Doing so may cause deffective operation.
9. The ORB series is constructed to leak air. Because of this, there may be some problems, such as an inability to control the speed of the piston when restarting and an inability to maintain stopping position, due to the closed center's 3-position valve. Use the 3-position valve of the pressure center as the pressure control circuit on both sides.
   Consult the nearest Koganei sales office regarding the interim stop control circuit if the load will be extremely heavy due to something like a vertical mounting.

Installing the main unit

1. Basically, to mount the unit, tighten the mounting screws in the 4 counterbore holes on the end plates.
2. When accuracy is required at mid-stroke, use F-type supports to secure the entire mounting surface of the cylinder barrel to the mounting surface. If the stroke is less than 100 mm [3.94 in], install an F-type support in the middle of the stroke. Refer to the following diagram for the pitch of the F-type supports if the stroke is more than 100 mm [3.94 in].

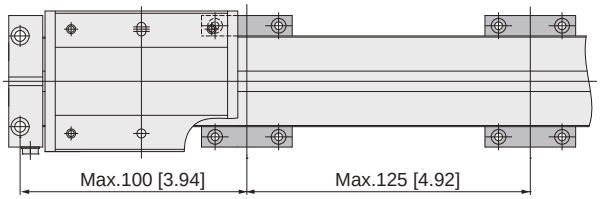

3. Tighten the screws to the torque shown in the following table when mounting the unit.

N·m [ft·lbf]

Model	End plate	F-type support
ORB10	2.8 [2.065]	0.9 [0.664]
ORB16	2.8 [2.065]	0.9 [0.664]
ORB20	6.2 [4.573]	2 [1.475]
ORB25	10 [7.376]	2 [1.475]

Mounting surface

As shown in the diagram, the reference planes are on the cylinder barrel's sides, use them if you need the slider to run accurately. Also, use them if you need consistent positioning when you remove and re-install the product.

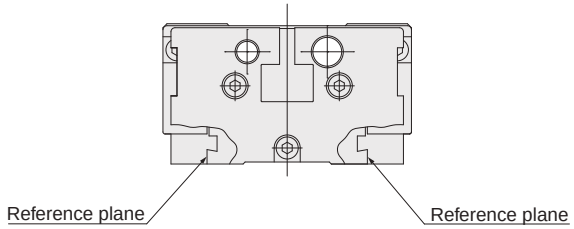

Stroke adjustment

Selecting an optional shock absorber, rubber stopper, or metal stopper makes it easy to adjust the stroke to the range in the specifications. After completing the adjustment, set it by tightening the lock nuts.
If you are using a touch switch, the stroke adjustment range is smaller.

mm [in]

Model	Cushioning type	L
ORB10	Shock absorber	Min. 2 to max. 7 [Min. 0.079 to max. 0.276]
	Rubber stopper	
	Metal stopper	Min. 2 to max. 18 [Min. 0.079 to max. 0.709]
	When using a touch switch	Min. 2 to max. 6 [Min. 0.079 to max. 0.236]
ORB16	Shock absorber	Min. 1 to max. 21 [Min. 0.039 to max. 0.827]
	Rubber stopper	
	Metal stopper	Min. 1 to max. 18 [Min. 0.039 to max. 0.709]
	When using a touch switch	Min. 1 to max. 6 [Min. 0.039 to max. 0.236]
ORB20	Shock absorber	Min. 2 to max. 30 [Min. 0.079 to max. 1.181]
	Rubber stopper	
	Metal stopper	Min. 2 to max. 25 [Min. 0.079 to max. 0.984]
ORB25	Shock absorber	Min. 2 to max. 33 [Min. 0.079 to max. 1.299]
	Rubber stopper	
	Metal stopper	Min. 2 to max. 23 [Min. 0.079 to max. 0.906]

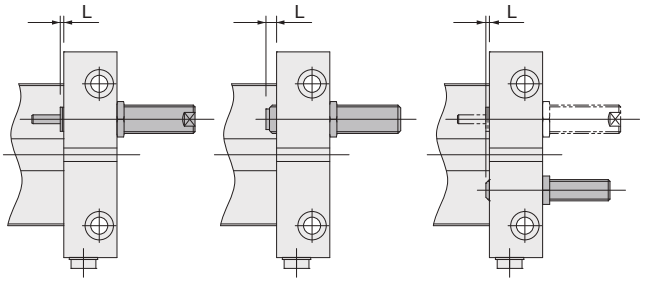

Shock absorber **Rubber stopper** **Metal stopper**

When mounting the shock absorber, rubber stopper, or metal stopper, always use just the maximum tightening torque on the mounting nut. Using excessive torque may damage the shock absorber or other parts.

Maximum tightening torque for mounting nut N·m [ft·lbf]

Model	Shock absorber Rubber stopper	Metal stopper
ORB10	0.85 [0.63]	0.85 [0.63]
ORB16	2.5 [1.84]	0.85 [0.63]
ORB20	6.5 [4.79]	6.5 [4.79]
ORB25	8.0 [5.90]	6.5 [4.79]

Selection

Allowable load and moment

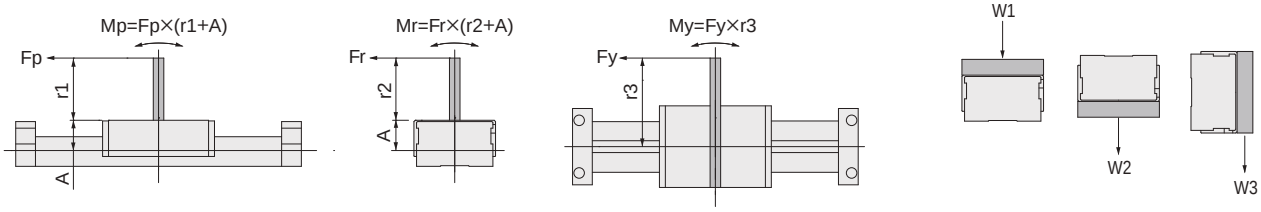

Pitching moment : Mp = Fp × (r1 + A) (N·m [ft·lbf])
Rolling moment : Mr = Fr × (r2 + A) (N·m [ft·lbf])
Yawing moment : My = Fy × r3 (N·m [ft·lbf])
Maximum payload : W_1, W_2, W_3 (N [lbf])

Model	A mm [in]
ORB10	20 [0.79]
ORB16	23 [0.91]
ORB20	26 [1.02]
ORB25	30 [1.18]

It is possible to apply a load directly on the ORB series rodless cylinder and use it. However, the load and the moment should not exceed the values listed below.

Moment & load / Model	Mp N·m [ft·lbf]	Mr N·m [ft·lbf]	My N·m [ft·lbf]	W1 N [lbf]	W2 N [lbf]	W3 N [lbf]
ORB10	6 [4.4]	6 [4.4]	6 [4.4]	40 [9]		
ORB16	9 [6.6]	7 [5.2]	8 [5.9]	90 [20]		
ORB20	20 [14.8]	18 [13.3]	18 [13.3]	140 [31]		
ORB25	30 [22.1]	30 [22.1]	26 [19.2]	160 [36]		

Slider displacement

(Reference values)

Displacement at P when various moments are applied

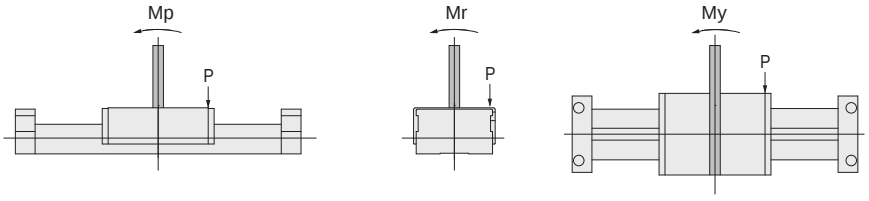

● **ORB10**

Pitching Moment: (Mp)

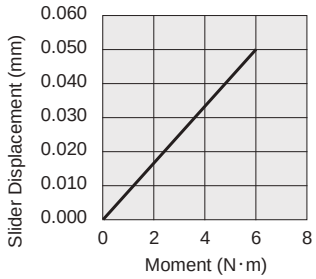

1 mm = 0.0394 in
1 N·m = 0.738 ft/s

Rolling Moment: (Mr)

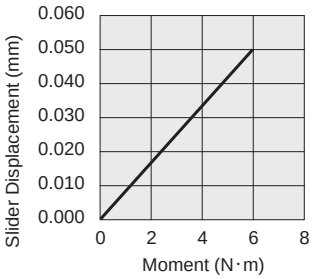

1 mm = 0.0394 in
1 N·m = 0.738 ft/s

Yawing moment: (My)

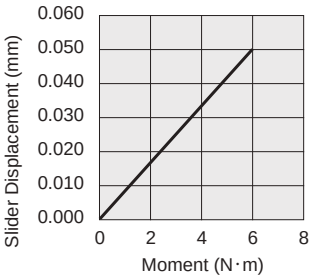

1 mm = 0.0394 in
1 N·m = 0.738 ft/s

● ORB16

Pitching Moment: (Mp)

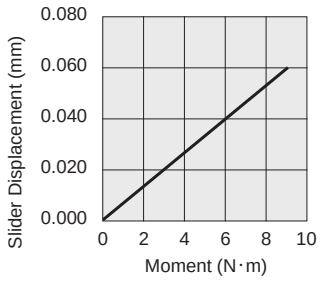

1 mm = 0.0394 in
1 N·m = 0.738 ft/s

Rolling Moment: (Mr)

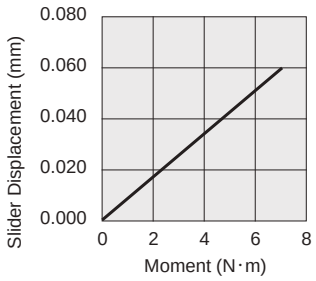

1 mm = 0.0394 in
1 N·m = 0.738 ft/s

Yawing moment: (My)

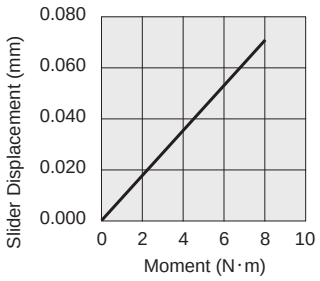

1 mm = 0.0394 in
1 N·m = 0.738 ft/s

● ORB20

Pitching Moment: (Mp)

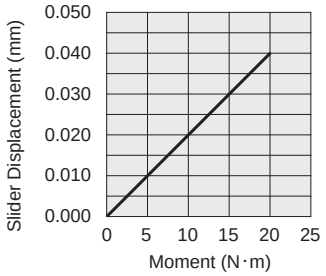

1 mm = 0.0394 in
1 N·m = 0.738 ft/s

Rolling Moment: (Mr)

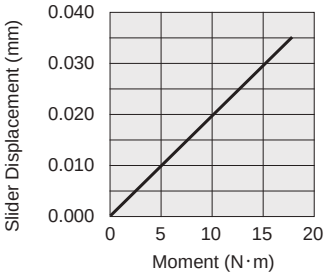

1 mm = 0.0394 in
1 N·m = 0.738 ft/s

Yawing moment: (My)

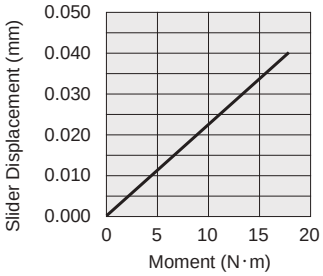

1 mm = 0.0394 in
1 N·m = 0.738 ft/s

● ORB25

Pitching Moment: (Mp)

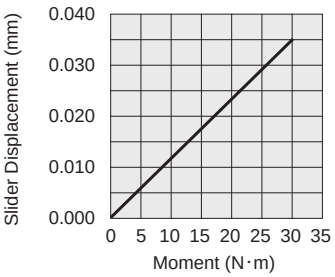

1 mm = 0.0394 in
1 N·m = 0.738 ft/s

Rolling Moment: (Mr)

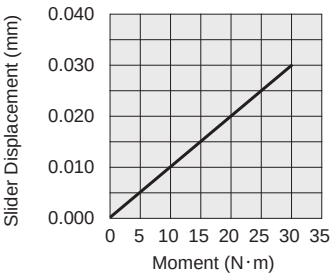

1 mm = 0.0394 in
1 N·m = 0.738 ft/s

Yawing moment: (My)

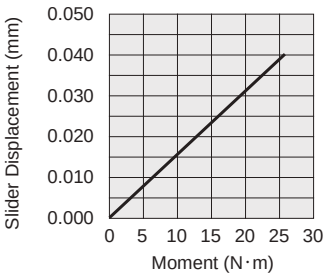

1 mm = 0.0394 in
1 N·m = 0.738 ft/s

Running parallelism of slider

Parallelism of slider when running at maximum 500 mm [19.69 in] stroke is shown in the table below.

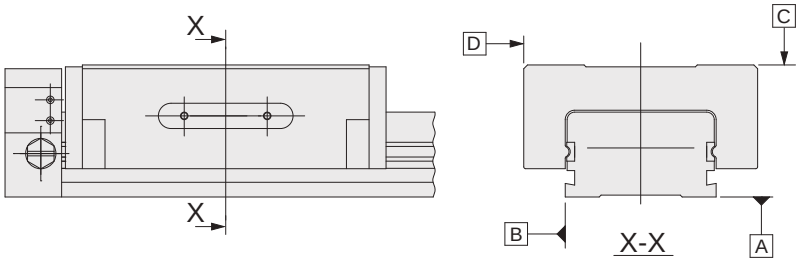

Item		ORB 10, 16, 20, 25
Running parallelism	Surface C relative to surface A	0.05 [0.0020]
	Surface D relative to surface B	0.03 [0.0012]

Values in the table indicate a fixed installation, on a surface with 0.02 mm [0.0008 in] flatness, using F supports on the entire installation surface of the cylinder barrel.

Cushioning capacity

Cushioning capacity graph

(Horizontal usage, at an operating pressure of 0.5 MPa [73 psi])

● **ORB10**

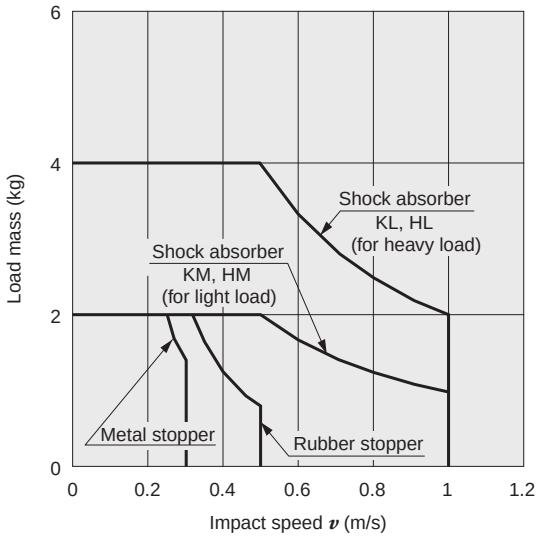

1 kg = 2.205 lb
1 m/s = 3.28 ft/s

● **ORB16**

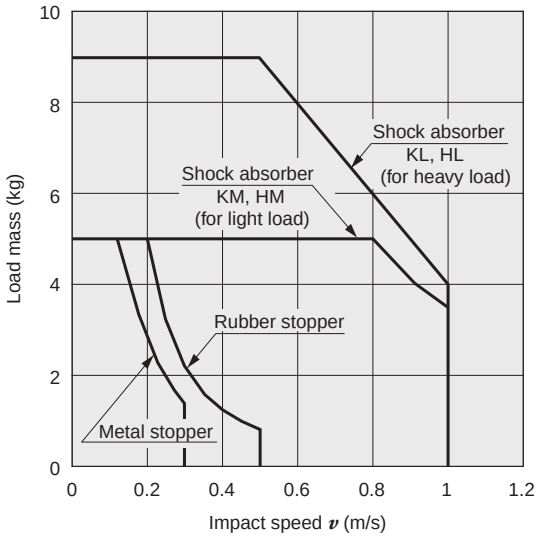

1 kg = 2.205 lb
1 m/s = 3.28 ft/s

● **ORB20**

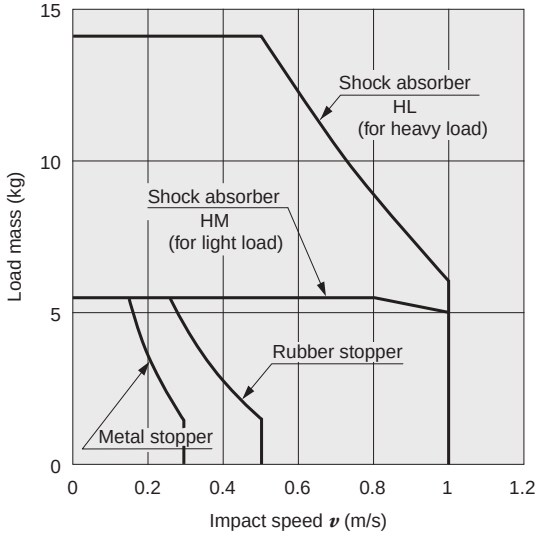

1 kg = 2.205 lb
1 m/s = 3.28 ft/s

● **ORB25**

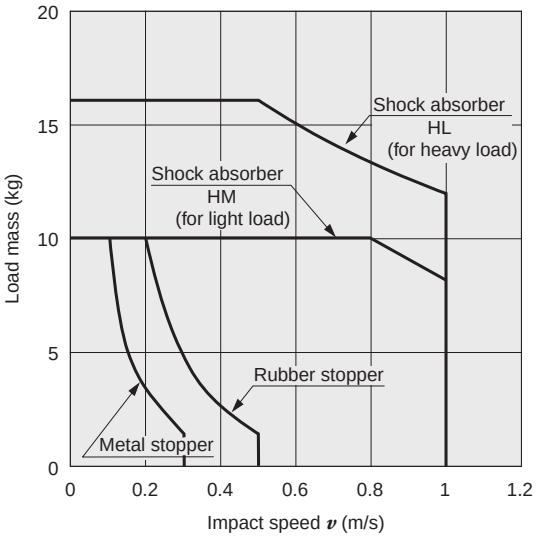

1 kg = 2.205 lb
1 m/s = 3.28 ft/s

The load masses in the graph are all the load weights that the ORB series cylinders can carry.
The impact speeds are the speed immediately before the slider impacts the cushion. This is different from the "average speed (cylinder stroke/travel time)."

Specifications



Symbol

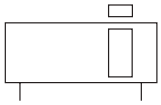

Specifications

Item \ Model		ORB10	ORB16	ORB20	ORB25
Cylinder bore	mm [in]	10 [0.394]	16 [0.630]	20 [0.787]	25 [0.984]
Medium		Air[Note 1]			
Operating type		Double acting type			
Operating pressure range	MPa [psi]	0.2 to 0.7 [29 to 102]	0.2 to 0.8 [29 to 116]		
Proof pressure	MPa [psi]	1.05 [152]	1.2 [174]		
Operating temperature range	°C [°F]	0 to 60 [32 to 140][Note 2]		0 to 40 [32 to 104][Note 2]	
Operating speed range mm/s [in/sec]	Shock absorber	30 to 1000 [1.2 to 39.4][Note 3] (50 to 1000 [2.0 to 39.4])[Note 4]			
	Rubber stopper	30 to 500 [1.2 to 19.7][Note 3] (50 to 500 [2.0 to 19.7])[Note 4]			
	Metal stopper	30 to 300 [1.2 to 11.8][Note 3] (50 to 300 [2.0 to 11.8])[Note 4]			
Cushion		Shock absorber			
		Rubber stopper			
		Metal stopper			
Lubrication		Not required[Note 5]			
Parallelism[Note 6]	mm [in]	0.1 [0.004]			
Stroke adjustment range mm [in]	Shock absorber	One side 0 to –5 [0 to –0.197]	One side 0 to –20 [0 to –0.787]	One side 0 to –28 [0 to –1.102]	One side 0 to –31 [0 to –1.22]
	Rubber stopper	One side 0 to –5 [0 to –0.197]	One side 0 to –20 [0 to –0.787]	One side 0 to –28 [0 to –1.102]	One side 0 to –31 [0 to –1.22]
	Metal stopper	One side 0 to –16 [0 to –0.630]	One side 0 to –17 [0 to –0.669]	One side 0 to –23 [0 to –0.906]	One side 0 to –21 [0 to –0.827]
	when touch switch used[Note 7]	One side 0 to –4 [0 to –0.157]	One side 0 to –5 [0 to –0.197]	–	–
Maximum stroke	mm [in]	500 [19.69]			
Maximum payload[Note 3]	kg [lb]	4 [8.8]	9 [19.8]	14 [30.9]	16 [35.3]
Connection port size		M5×0.8		Rc1/8	

Note 1: Use clean compressed air that contains no moisture, dust, oxidized oil or other contaminants.
2: Use in environments above the operating temperature range causes the guide to generate backlash and play and lowers precision.
3: See the cushioning capacity graphs on page ⑩ regarding the relationship between the payload and the piston speed.
4: The values in parentheses are the operating speed range for H1 grease specifications.
5: This product can be used without lubrication. Be sure to contact Koganei about using lubrication. Do not use turbine oil.
6: This is the parallelism between the bottom of the unit and the top of the slider when the end plates and F-type bracket supported cylinder barrel are secured. This is different from running parallelism.
7: If a METROL CS067A touch switch is installed, the stroke adjustment range is smaller (cannot be installed on the ORB20 or ORB25).

Cylinder bore and stroke

mm

Model	Stroke
ORB10, ORB16, ORB20, ORB25	50, 100, 150, 200, 250, 300, 350, 400, 450, 500

* Use cushion to adjust the stroke if you want to use a mid-range stroke.

Mass

kg [oz]

Model	Zero stroke mass	Additional mass for every 1 mm of stroke	Addition mass of options			
			Shock absorber	Rubber stopper	Metal stopper	F-type support (2 pcs)
ORB10	0.376 [13.26]	0.0011 [0.039]	0.005 [0.18]	0.005 [0.18]	0.007 [0.25]	0.012 [0.42]
ORB16	0.563 [19.86]	0.0017 [0.060]	0.0115 [0.406]	0.013 [0.46]		
ORB20	1.285 [45.33]	0.0029 [0.10]	0.022 [0.78]	0.032 [1.13]	0.030 [1.06]	0.026 [0.92]
ORB25	1.812 [63.92]	0.0036 [0.13]	0.037 [1.31]	0.050 [1.76]		

Additional mass of sensor rail (sensor rail + magnet set)

kg [oz]

Model	Zero stroke mass	Additional mass for every 1 mm of stroke	Sensor switch[Note]	
			1 m lead wire	3 m lead wire
ORB10	0.018 [0.635]	0.00013 [0.0046]	0.015 [0.53]	0.035 [1.24]
ORB16	0.020 [0.705]			
ORB20	0.023 [0.811]			
ORB25	0.024 [0.847]			

Note: Sensor switches ZE175G and ZE177G are 0.015 kg [0.53 oz]

Shock absorber specifications

Item	Model	ORB10		ORB16	
		For heavy load (**KL**, **HL**)	For light load (**KM**, **HM**)	For heavy load (**KL**, **HL**)	For light load (**KM**, **HM**)
Applicable shock absorber	Standard specifications	**KL**: **KSHJ6×6-01**	**KM**: **KSHJ6×6-02**	**KL**: **KSHJ8×8-01**	**KM**: **KSHJ8×8-02**
	H1 grease specifications	**HL**: **H1-KSHJ6×6-01**	**HM**: **H1-KSHJ6×6-02**	**HL**: **H1-KSHJ8×8-01**	**HM**: **H1-KSHJ8×8-02**
Maximum absorption capacity	J [ft·lbf]	1 [0.74]	0.5 [0.37]	2 [1.48]	
Absorption stroke	mm [in]	6 [0.236]		8 [0.315]	
Maximum impact speed	m/s [ft/sec]	1 [3.28]		1 [3.28]	
Maximum operating frequency	cycle/min	30		90 (H1 grease specifications 60)	
Maximum absorption per unit of time	J/min [ft·lbf/min]	15 [11.1]		60 [44.3]	
Spring return force (at compressed)	N [lbf]	4 [0.90]		8.6 [1.93]	
Deflection angle		1° or less			
Operating temperature range	°C [°F]	0 to 60 [32 to 140]			

Item	Model	ORB20		ORB25	
		For heavy load (**HL**)	For light load (**HM**)	For heavy load (**HL**)	For light load (**HM**)
Applicable shock absorber		**H1-KSHJ10×10-01**	**H1-KSHJ10×10-02**	**H1-KSHJ12×10-01**	**H1-KSHJ12×10-02**
Maximum absorption capacity	J [ft·lbf]	3 [2.21]		6 [4.43]	
Absorption stroke	mm [in]	10 [0.394]		10 [0.394]	
Maximum impact speed	m/s [ft/sec]	1 [3.28]		1 [3.28]	
Maximum operating frequency	cycle/min	60		40	
Maximum absorption per unit of time	J/min [ft·lbf/min]	110 [81.1]		150 [110.6]	
Spring return force (at compressed)	N [lbf]	8 [1.80]		7.6 [1.71]	
Deflection angle		1° or less			
Operating temperature range	°C [°F]	0 to 60 [32 to 140]			

Note: Shock absorber durability differs depending on the operating conditions of the ORB series.

Remarks 1: Use the shock absorber within its capacity range (see the cushioning capacity graphs on page ⑩).
2: The maximum impact speed of the shock absorber is 1 m/s [3.28 ft/sec]. This differs from the average speed, so do not exceed a speed of 1 m/s [3.28 ft/sec] at the time of impact.
3: Do not use the shock absorber in locations subject to dripping water, dripping oil or excessive dust. Water, oil, or dust on the piston rod results in damage and decreases service life. Cover the unit when using it in locations where it might be subject to excessive dust, dripping water, or dripping oil.
4: Do not loosen the lock screw on the end of the shock absorber. Oil may leak out from the unit and lead to decreased functionality of the shock absorber.
5: Do not install other shock absorbers on this product. Since product characteristics are different, use of other shock absorbers may damage the cylinder.

Theoretical thrust F

N [lbf]

Model	Pressure area mm² [in²]	Air pressure MPa [psi]						
		0.2 [29]	0.3 [44]	0.4 [58]	0.5 [73]	0.6 [87]	0.7 [102]	0.8 [116]
ORB10	78.5 [0.1217]	16 [3.6]	24 [5.4]	31 [7.0]	39 [8.8]	47 [10.6]	55 [12.4]	—
ORB16	201 [0.312]	40 [9.0]	60 [13.5]	80 [18.0]	101 [22.7]	121 [27.2]	141 [31.7]	161 [36.2]
ORB20	314 [0.487]	63 [14.2]	94 [21.1]	126 [28.3]	157 [35.3]	188 [42.3]	220 [49.5]	251 [56.4]
ORB25	490 [0.760]	98 [22]	147 [33.0]	197 [44.3]	245 [55.1]	294 [66.1]	343 [77.1]	392 [88.1]

Values in the table are only theoretical. There may be some differences from these in actual applications. So, when you select a cylinder, consider the ratio of W/F, given the theoretical thrust F on the allowable load W. Use the following values as guidelines for the mounting direction in which the ORB series cylinders are installed.

●Horizontal mounting
W/F ≦ 10
Use the product within the cushioning capacity range.

●Vertical mounting
Generally, W/F ≦ 0.2

Air flow rate and air consumption

Air consumption of the ORB series is calculated using the equation below. However, the simplified chart below can make the calculations easier.

Air flow rate: $Q1 = \frac{\pi D^2}{4} \times L \times \frac{60}{t} \times \frac{P + 0.101}{0.101} \times 10^{-6}$

Air consumption: $Q2 = \frac{\pi D^2}{4} \times L \times 2 \times n \times \frac{P + 0.101}{0.101} \times 10^{-6}$

Q_1 :	Air flow rate required by the cylinder	ℓ/min (ANR)
Q_2 :	Cylinder air consumption	ℓ/min (ANR)
D :	Cylinder bore	mm
L :	Cylinder stroke	mm
t :	Time needed for the cylinder to travel 1 stroke	s
n :	Number of cylinder reciprocations per minute	cycles/min
P :	Operating pressure	MPa

Air consumption for every 1 mm [0.0394 in] of the stroke

cm³/reciprocations [in³/reciprocations](ANR)

Cylinder bore mm [in]	Air pressure MPa [psi]						
	0.2 [29]	0.3 [44]	0.4 [58]	0.5 [73]	0.6 [87]	0.7 [102]	0.8 [116]
10 [0.394]	0.468 [0.02856]	0.623 [0.03802]	0.779 [0.04754]	0.934 [0.05700]	1.09 [0.06652]	1.245 [0.07597]	—
16 [0.630]	1.198 [0.07311]	1.596 [0.09739]	1.993 [0.12162]	2.391 [0.14591]	2.789 [0.17020]	3.187 [0.19448]	3.585 [0.21877]
20 [0.787]	1.871 [0.11418]	2.493 [0.15213]	3.115 [0.19009]	3.737 [0.22805]	4.358 [0.26594]	4.980 [0.3039]	5.602 [0.34186]
25 [0.984]	2.924 [0.17843]	3.896 [0.23775]	4.867 [0.29700]	5.838 [0.35626]	6.810 [0.41557]	7.781 [0.47483]	8.753 [0.53414]

The values in the table are calculated based upon the air flow rate and air consumption at a 1 mm [0.0394 in] stroke during 1 reciprocation of the ORB series cylinder. Actually required air flow rate and air consumption are calculated with the equations below.

● When calculating air flow. (to select F.R.L., valves, etc.)

Example: For an ORB series cylinder with a bore of 10 mm [0.394 in] traveling at a speed of 300 mm/s [11.8 in/sec], operating with air pressure of 0.5 MPa [73 psi].

$0.934 \times \frac{1}{2} \times 300 \times 10^{-3} = 0.140$ ℓ/s [8.54 in³/sec](ANR)

(The flow rate per minute is calculated using the equation $0.934 \times \frac{1}{2} \times 300 \times 60 \times 10^{-3} = 8.406$ ℓ/min [512.97 in³/min] (ANR).)

● When calculating air consumption.

Example 1: For an ORB series cylinder with a bore size of 10 mm [0.394 in], a stroke of 100 mm [3.94 in], for 1 reciprocation at air pressure of 0.5 MPa [73 psi].

$0.934 \times 100 \times 10^{-3} = 0.093$ ℓ/reciprocation [5.68 in³/reciprocation] (ANR)

Example 2: For an ORB series cylinder with a bore size of 10 mm [0.394 in], a stroke of 100 mm [3.94 in], for 10 reciprocations per minute at an air pressure of 0.5 MPa [73 psi].

$0.934 \times 100 \times 10 \times 10^{-3} = 0.934$ ℓ/min [56.99 in³/reciprocation] (ANR)

Note: To calculate the actual air consumption requirements when using an ORB series cylinder, add the air consumption of the piping to the air consumption from the above equations.

Order codes for ORB10 and ORB16 *See page ⓯ for the ORB20 and ORB25 order codes.

●Standard specifications

ORB [ ] **10 × 200** - [ ][ ] - [ ][ ] - [ ][ ] - [ ][ ] - [ ][ ] - [ ][ ][ ]

ORB Series

Cylinder bore
×
Stroke

Sensor rail[Note 1]
Blank: No sensor rail
S : With sensor rail

F-type support bracket
Blank: No bracket
F : With F-type support

Number of support brackets
1: 1 set (2 pieces)
2: 2 sets (4 pieces)
⋮

Shock absorber[Note 2]
Blank: **None**
KL : For heavy load
KM : For light load[Note 3]

Number of shock absorbers[Note 4]
1: 1 piece
2: 2 pieces

Rubber stopper[Note 2]
Blank: None
RS : With rubber stopper

Number of rubber stoppers[Note 4]
1: 1 piece
2: 2 pieces

Number of sensor switches
1: 1 piece
2: 2 pieces
3: 3 pieces
⋮

Lead wire length
A: 1000 mm [39 in]
B: 3000 mm [118 in]
G: 300 mm [11.8 in] with M8 connector (**ZE175**, **ZE177** only)

Sensor switch model
Blank : No sensor switch
ZE135: 2-lead wire solid state type
ZE155: 3-lead wires, solid state NPN output type
ZE175: 3-lead wires, solid state PNP output type
ZE137: 2-lead wire, 2-color LED solid state type
ZE157: 3-lead wires, 2-color LED solid state NPN output type
ZE177: 3-lead wires, 2-color LED solid state PNP output type
ZE101: 2-lead wire, reed switch type without indicator
ZE102: 2-lead wire, reed switch type

Number of metal stoppers
1: 1 piece
2: 2 pieces

Metal stopper[Note 2]
Blank: None
MS : With metal stopper

●Food processing machinery H1 grease specifications

H1 - ORB [ ] **10 × 200** - [ ][ ] - [ ][ ] - [ ][ ] - [ ][ ] - [ ][ ] - [ ][ ][ ]

For food processing machinery H1 grease specifications (NSF H1)

ORB Series

Cylinder bore
×
Stroke

Sensor rail[Note 1]
Blank: No sensor rail
S : With sensor rail

F-type support bracket
Blank: No bracket
F : With F-type support

Number of support brackets
1: 1 set (2 pieces)
2: 2 sets (4 pieces)
⋮

Shock absorber (H1 oil specifications)[Note 2]
Blank: None
HL : For heavy load
HM : For light load[Note 3]

Number of shock absorbers[Note 4]
1: 1 piece
2: 2 pieces

Rubber stopper[Note 2]
Blank: None
RS : With rubber stopper

Number of rubber stoppers[Note 4]
1: 1 piece
2: 2 pieces

Number of sensor switches
1: 1 piece
2: 2 pieces
3: 3 pieces
⋮

Lead wire length
A: 1000 mm [39 in]
B: 3000 mm [118 in]
G: 300 mm [11.8 in] with M8 connector (ZE175, ZE177 only)

Sensor switch model
Blank : No sensor switch
ZE135: 2-lead wire solid state type
ZE155: 3-lead wires, solid state NPN output type
ZE175: 3-lead wires, solid state PNP output type
ZE137: 2-lead wire, 2-color LED solid state type
ZE157 : 3-lead wires, 2-color LED solid state NPN output type
ZE177 : 3-lead wires, 2-color LED solid state PNP output type
ZE101: 2-lead wire, reed switch type without indicator
ZE102: 2-lead wire, reed switch type

Number of metal stoppers
1: 1 piece
2: 2 pieces

Metal stopper[Note 2]
Blank: None
MS : With metal stopper

Note 1: Products equipped with a sensor rail are shipped with the sensor magnet and sensor rail attached to the slider locating pin hole side. Refer to page ㉗ about installing the sensor rail and sensor magnets to mount the sensor rail on the opposite side.
2: Shock absorbers, rubber stoppers, or metal stoppers are provided with the product.
3: Light load specifications available upon order.
4: Up to a total of two shock absorbers and rubber stoppers.

Order codes for ORB20 and ORB25 *See page ⑭ for the ORB10 and ORB16 order codes.

The shock absorbers for ORB20 and ORB25 can use only H1 oil.

●Standard specifications

ORB □ **20 × 200** - □□ - □□ - □□ - □□ - □□ - □□□

ORB Series

Cylinder bore
×
Stroke

Sensor rail[Note 1]
Blank: No sensor rail
S : With sensor rail

F-type support bracket
Blank: No bracket
F : With F-type support

Number of support brackets
1: 1 set (2 pieces)
2: 2 sets (4 pieces)
⋮

Shock absorber (H1 oil specifications)[Note 2]
Blank: None
HL : For heavy load
HM : For light load[Note 3]

Number of shock absorbers[Note 4]
1: 1 piece
2: 2 pieces

Rubber stopper[Note 2]
Blank: None
RS : With rubber stopper

Number of rubber stoppers[Note 4]
1: 1 piece
2: 2 pieces

Metal stopper[Note 2]
Blank: None
MS : With metal stopper

Number of metal stoppers
1: 1 piece
2: 2 pieces

Sensor switch model
Blank: No sensor switch
ZE135: 2-lead wire solid state type
ZE155: 3-lead wires, solid state NPN output type
ZE175: 3-lead wires, solid state PNP output type
ZE137: 2-lead wire, 2-color LED solid state type
ZE157: 3-lead wires, 2-color LED solid state NPN output type
ZE177: 3-lead wires, 2-color LED solid state PNP output type
ZE101: 2-lead wire, reed switch type without indicator
ZE102: 2-lead wire, reed switch type

Lead wire length
A: 1000 mm [39 in]
B: 3000 mm [118 in]
G: 300 mm [11.8 in] with M8 connector
(**ZE175, ZE177** only)

Number of sensor switches
1: 1 piece
2: 2 pieces
3: 3 pieces
⋮

●Food processing machinery H1 grease specifications

H1 - **ORB** □ **20 × 200** - □□ - □□ - □□ - □□ - □□ - □□□

For food processing machinery H1 grease specifications (NSF H1)

ORB Series

Cylinder bore
×
Stroke

Sensor rail[Note 1]
Blank: No sensor rail
S : With sensor rail

F-type support bracket
Blank: No bracket
F : With F-type support

Number of support brackets
1: 1 set (2 pieces)
2: 2 sets (4 pieces)
⋮

Shock absorber (H1 oil specifications)[Note 2]
Blank: None
HL: For heavy load
HM: For light load[Note 3]

Number of shock absorbers[Note 4]
1: 1 piece
2: 2 pieces

Rubber stopper[Note 2]
Blank: None
RS : With rubber stopper

Number of rubber stoppers[Note 4]
1: 1 piece
2: 2 pieces

Metal stopper[Note 2]
Blank: None
MS: With metal stopper

Number of metal stoppers
1: 1 piece
2: 2 pieces

Sensor switch model
Blank: No sensor switch
ZE135: 2-lead wire solid state type
ZE155: 3-lead wires, solid state NPN output type
ZE175: 3-lead wires, solid state PNP output type
ZE137: 2-lead wire, 2-color LED solid state type
ZE157: 3-lead wires, 2-color LED solid state NPN output type
ZE177: 3-lead wires, 2-color LED solid state PNP output type
ZE101: 2-lead wire, reed switch type without indicator
ZE102: 2-lead wire, reed switch type

Lead wire length
A: 1000 mm [39 in]
B: 3000 mm [118 in]
G: 300 mm [11.8 in] with M8 connector
(**ZE175, ZE177** only)

Number of sensor switches
1: 1 piece
2: 2 pieces
3: 3 pieces
⋮

Note 1: Products equipped with a sensor rail are shipped with the sensor magnet and sensor rail attached to the slider locating pin hole side. Refer to page ㉗ about installing the sensor rail and sensor magnets to mount the sensor rail on the opposite side.
2: Shock absorbers, rubber stoppers, or metal stoppers are provided with the product.
3: Light load specifications available upon order.
4: Up to a total of two shock absorbers and rubber stoppers.

Order codes

Additional parts

● Shock absorber

KSHJ □

Size

6×6-01: **ORB10**, for heavy loads
6×6-02: **ORB10**, for light loads
8×8-01: **ORB16**, for heavy loads
8×8-02: **ORB16**, for light loads

● Rubber stopper

RS-ORB □

Cylinder bore
10: For **ORB10**
16: For **ORB16**
20: For **ORB20**
25: For **ORB25**

● Metal stopper

MS-ORB □

Cylinder bore
10: For **ORB10**
16: For **ORB16**
20: For **ORB20**
25: For **ORB25**

Food processing machinery, H1 grease specifications

H1-KSHJ □

Size

6×6-01 : **H1-ORB10**, for heavy loads
6×6-02 : **H1-ORB10**, for light loads
8×8-01 : **H1-ORB16**, for heavy loads
8×8-02 : **H1-ORB16**, for light loads
10×10-01: **ORB20**, **H1-ORB20**, for heavy loads
10×10-02: **ORB20**, **H1-ORB20**, for light loads
12×10-01: **ORB25**, **H1-ORB25**, for heavy loads
12×10-02: **ORB25**, **H1-ORB25**, for light loads

●F-type support brackets (2 pcs)

F-ORB □

Cylinder bore
10: For **ORB10**
16: For **ORB16**
20: For **ORB20**
25: For **ORB25**

● Sensor rail

S-ORB □ × □

Stroke
50, **100**, **150**, **200**, **250**, **300**,
350, **400**, **450**, **500**

Cylinder bore
10: For **ORB10**
16: For **ORB16**
20: For **ORB20**
25: For **ORB25**

(1 sensor rail, 2 screws for sensor rail, 2 sensor spacers, 4 screws for installing sensor spacers)

●Sensor magnet set

MG-ORB □

Cylinder bore
10: For **ORB10**
16: For **ORB16**
20: For **ORB20**
25: For **ORB25**

(1 sensor magnet, 1 magnet holder, 2 screws for installing magnet holder)

Inner construction

Diagram is for ORB16

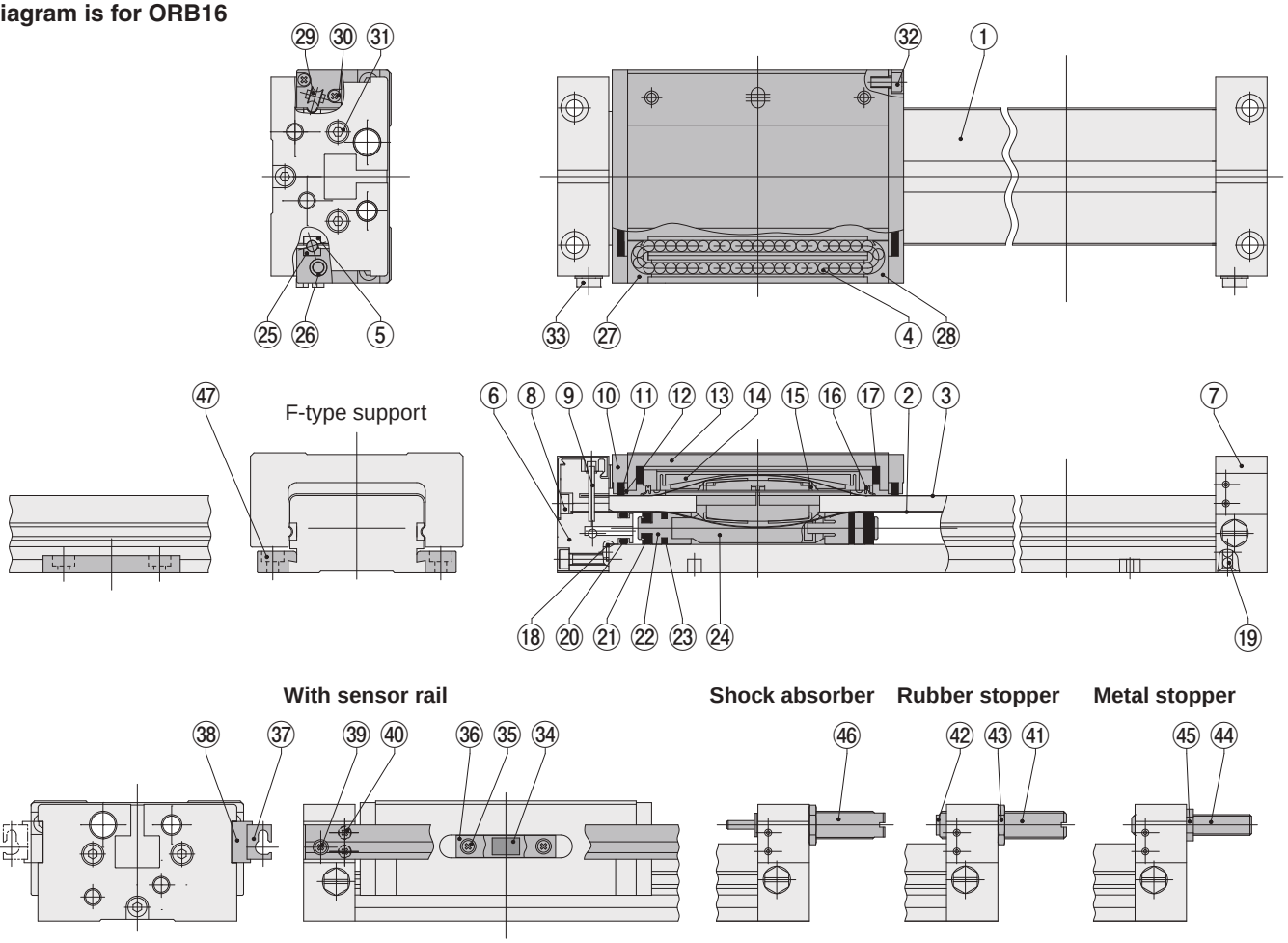

Major parts and materials *Some of the names, shapes, and materials are different for the ORB10.

No.	Name	Materials	Count	Remarks
①	Cylinder barrel	Aluminum alloy	1	Anodized
②	Inner seal band	Stainless chrome steel	1	
③	Outer seal band	Stainless chrome steel	1	
④	Stainless steel ball	Stainless steel	—	
⑤	Rail	Stainless steel	2	
⑥	End plate R	Aluminum alloy	1	Electroless nickel plated
⑦	End plate L	Aluminum alloy	1	Electroless nickel plated
⑧	Cap cover	PP	2	
⑨	Band fixing pin	Stainless steel	2	
⑩	Slider plate	Alloy steel	2	Electroless nickel plated
⑪	Slider wiper	Polyester fiber	2	
⑫	Wiper plate	POM	2	
⑬	Slider	Aluminum alloy	1	Electroless nickel plated
⑭	Mount cover	PBT	1	
⑮	Band guide	Special plastic	2	
⑯	Scraper	Nylon	1	
⑰	Damper sheet	Urethane rubber	2	
⑱	Gasket	Synthetic rubber (NBR)	2	
⑲	Steel ball	Alloy steel	2	
⑳	Cylinder gasket	Synthetic rubber (NBR)		
㉑	Piston seal	Synthetic rubber (NBR)	2	
㉒	Piston	POM	2	
㉓	Piston wiper	Polyester fiber	2	
㉔	Piston yoke	Aluminum alloy ϕ10 [0.394] is zinc alloy	1	Anodized ϕ10 [0.394] is electroless nickel plated

No.	Name	Materials	Count	Remarks
㉕	Rail	Stainless steel	2	
㉖	Return pipe	Stainless steel	2	
㉗	Return block R	POM	2	
㉘	Return block L	POM	2	
㉙	Return piece	POM	4	
㉚	Cross head pan screw	Stainless steel	8	
㉛	Hexagon socket head screw	Alloy steel ϕ10 [0.394] is stainless steel	6	Zinc plated, trivalent chromate (except ϕ10 [0.394])
㉜	Hexagon socket head screw	Stainless steel	4	
㉝	Plug	ϕ10 [0.394] and 16 [0.630] are brass	2	Nickel plated
		ϕ20 [0.787] and 25 [0.984] are steel		Zinc plated, trivalent chromate
㉞	Sensor magnet	Rare-earth magnet	—	
㉟	Magnet holder mounting screw	Stainless steel	—	
㊱	Magnet holder	PBT	—	
㊲	Sensor rail	Aluminum alloy	—	Anodized
㊳	Sensor spacer	Aluminum alloy	—	Anodized
㊴	Sensor rail mounting screw	Stainless steel	—	
㊵	Sensor spacer mounting screw	Stainless steel	—	
㊶	Rubber stopper bolt	Alloy steel	—	Electroless nickel plated
㊷	Damper	Synthetic rubber (urethane)	—	
㊸	Hexagon nut	Steel	—	Electroless nickel plated
㊹	Metal stopper bolt	Alloy steel	—	Electroless nickel plated
㊺	Hexagon nut	Steel	—	Electroless nickel plated
㊻	Shock absorber	—	—	
㊼	F-type support	Aluminum alloy	—	Anodized

Dimensions mm [in]

ORB10 × stroke

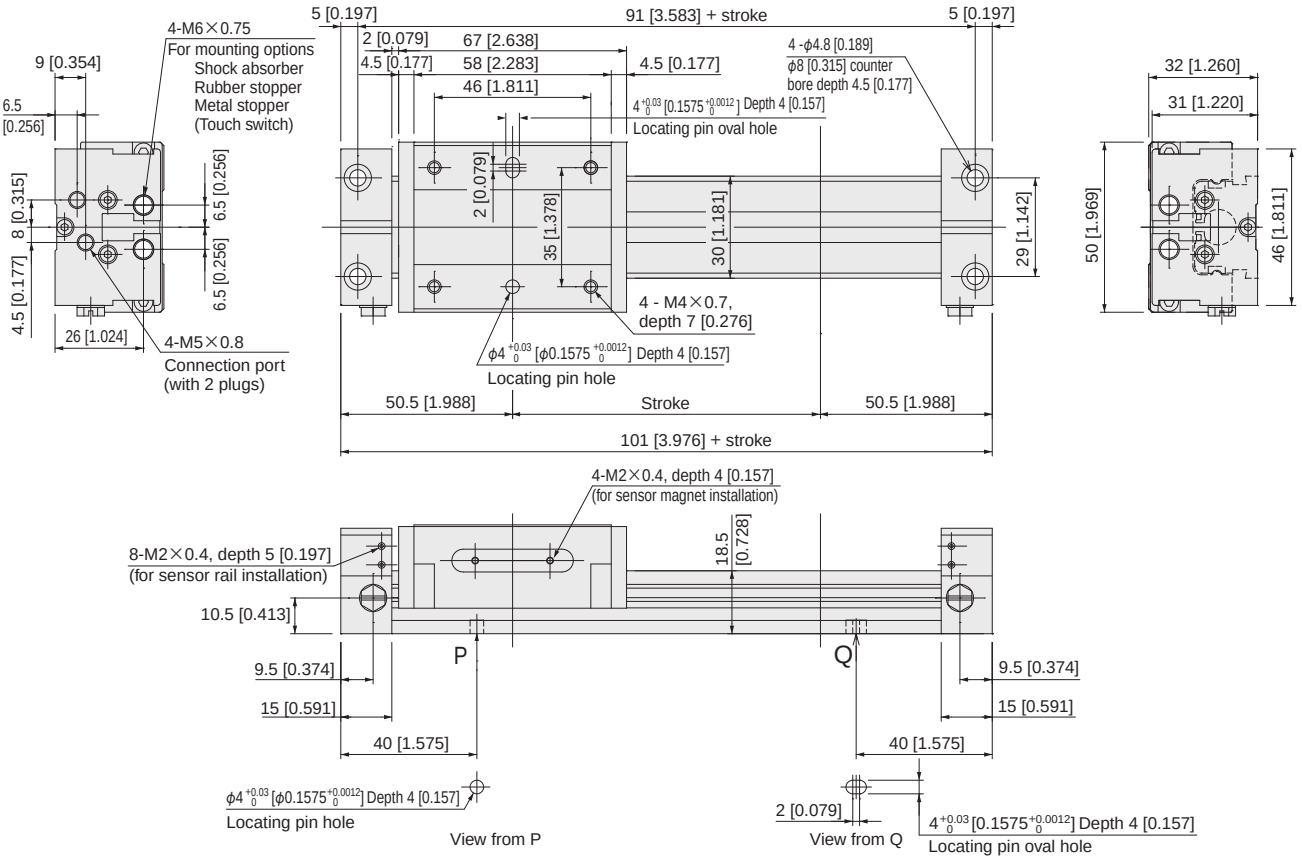

● Shock absorber

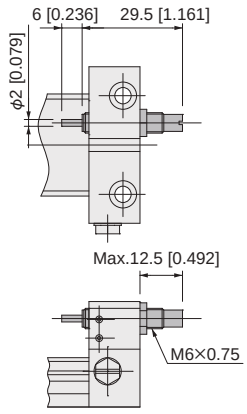

● Rubber stopper

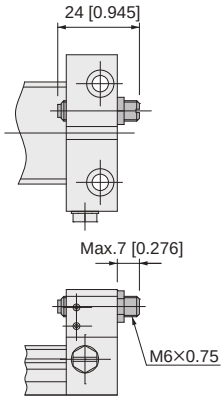

● Metal stopper

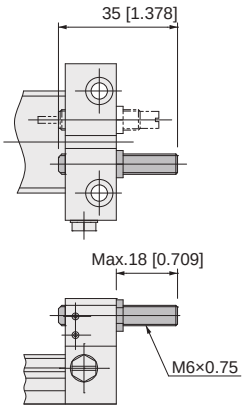

● Touch switch

(Reference: When using a METROL CS067A)

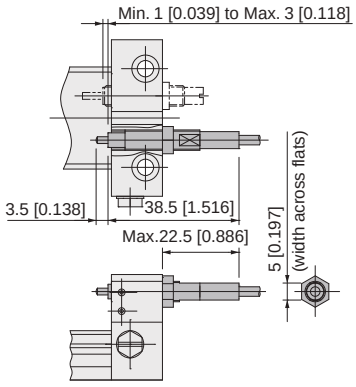

(Touch switch is supplied by user.)

● Sensor rail

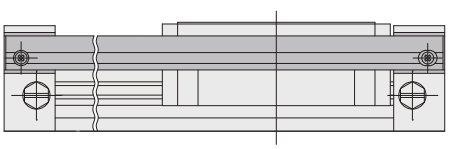

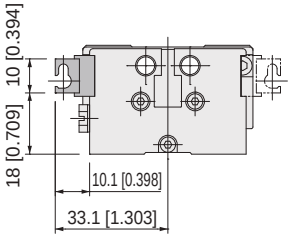

● F-type support

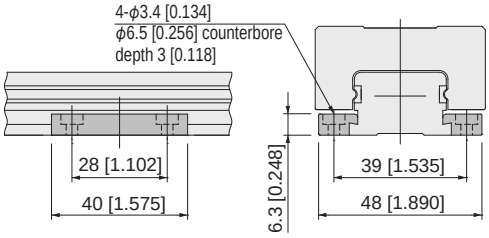

Products equipped with a sensor rail are shipped with the sensor magnet and sensor rail attached to the slider locating pin hole (ϕ 4 [0.157]) side.
Refer to page ㉗ about installing the sensor rail and sensor magnets to mount the sensor rail on the opposite side.

Dimensions mm [in]

ORB16 × stroke

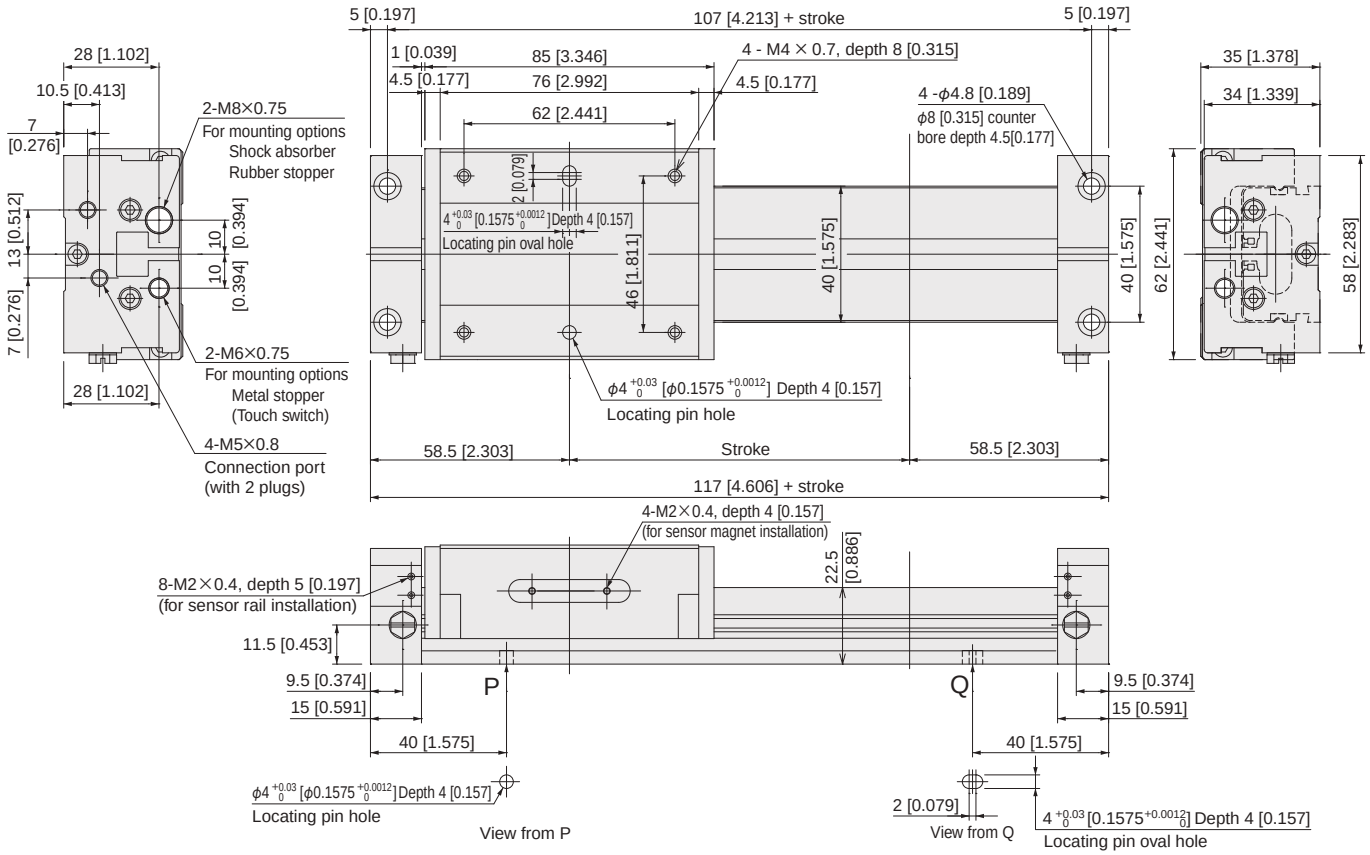

● Shock absorber

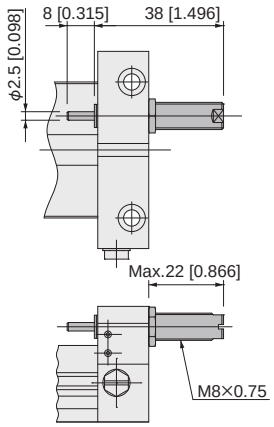

● Rubber stopper

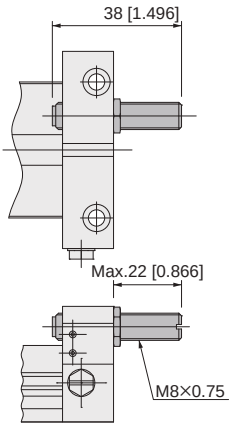

● Metal stopper

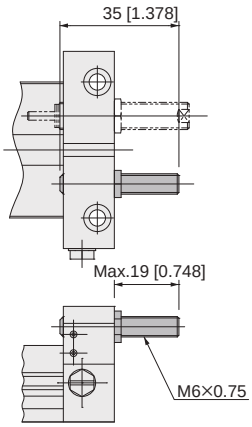

● Touch switch

(Reference: When using a METROL CS067A)

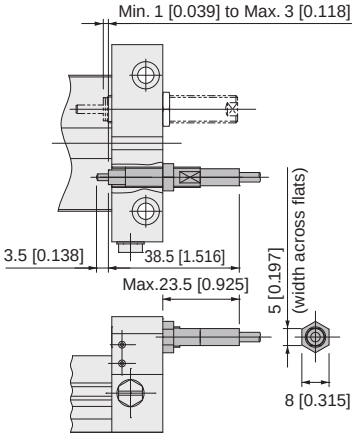

(Touch switch is supplied by user.)

● Sensor rail

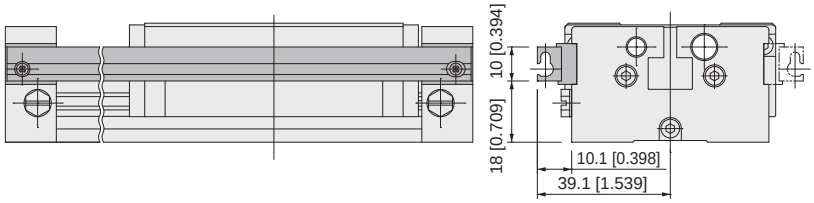

● F-type support

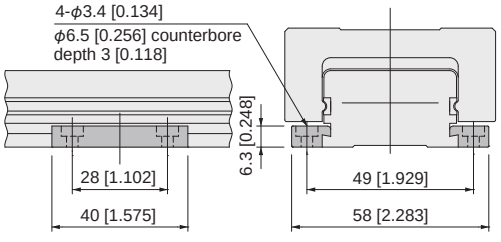

Products equipped with a sensor rail are shipped with the sensor magnet and sensor rail attached to the slider locating pin hole (ϕ 4 [0.157]) side.
Refer to page 27 about installing the sensor rail and sensor magnets to mount the sensor rail on the opposite side.

Dimensions mm [in]

ORB20 × stroke

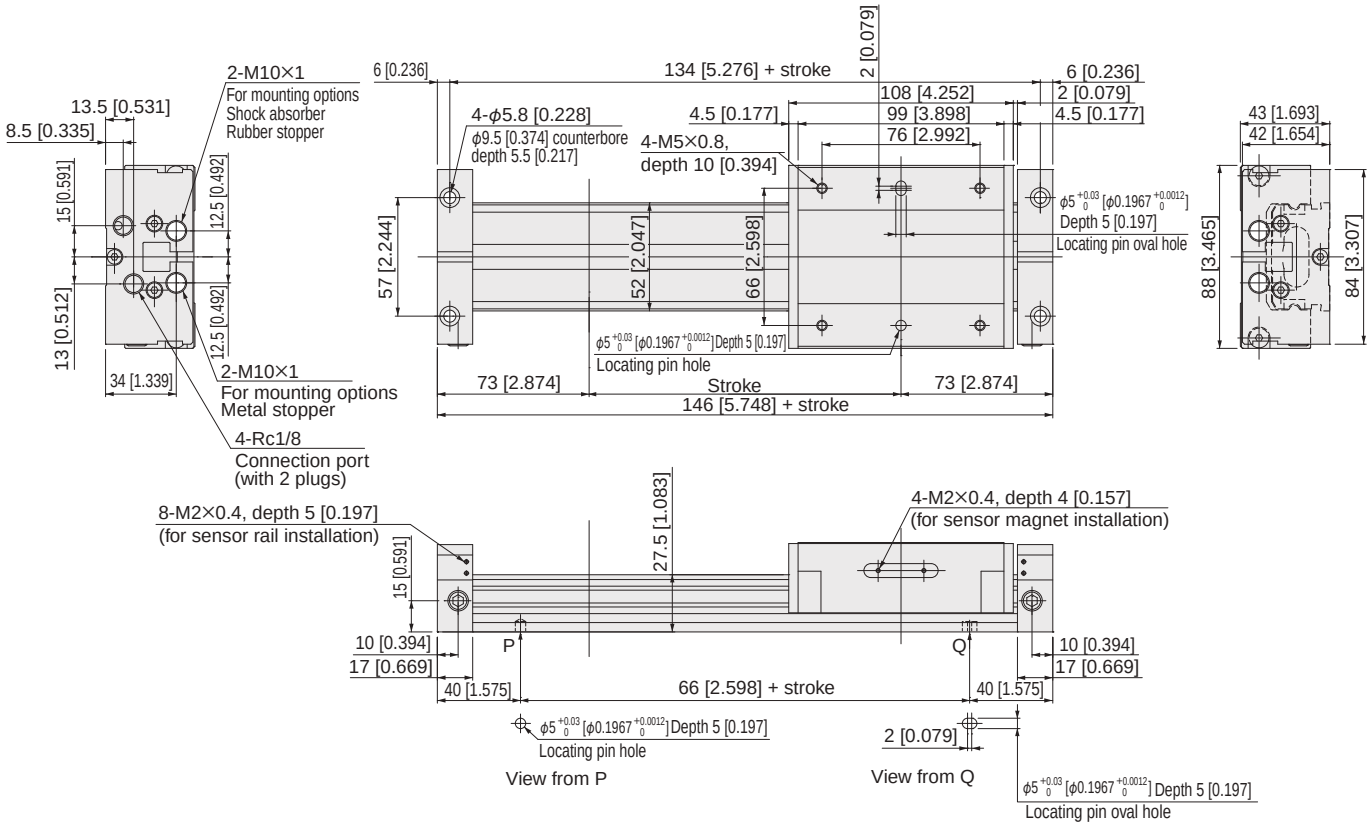

●Shock absorber

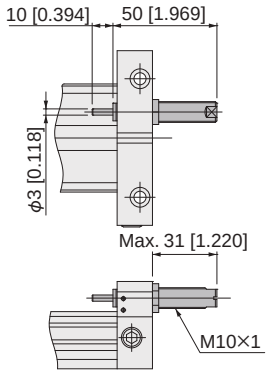

●Rubber stopper

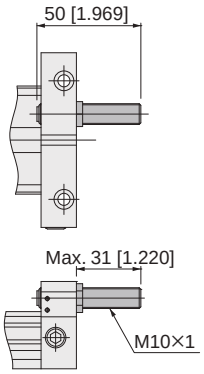

●Metal stopper

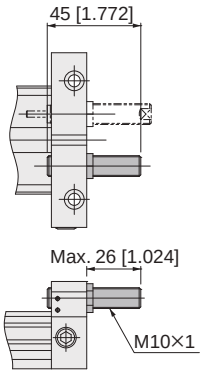

●Sensor rail

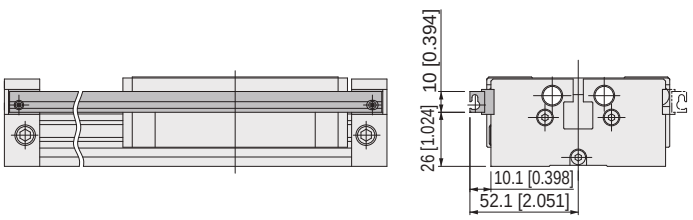

●F-type support

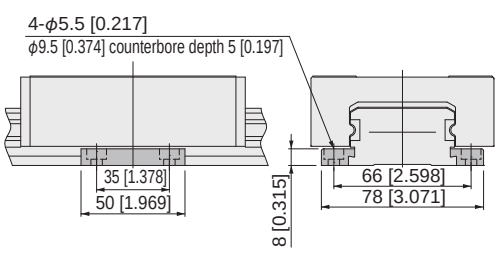

Products equipped with a sensor rail are shipped with the sensor magnet and sensor rail attached to the slider locating pin hole (ϕ5) side.
Refer to page 27 about installing the sensor rail and sensor magnets to mount the sensor rail on the opposite side.

Dimensions mm [in]

ORB25 × stroke

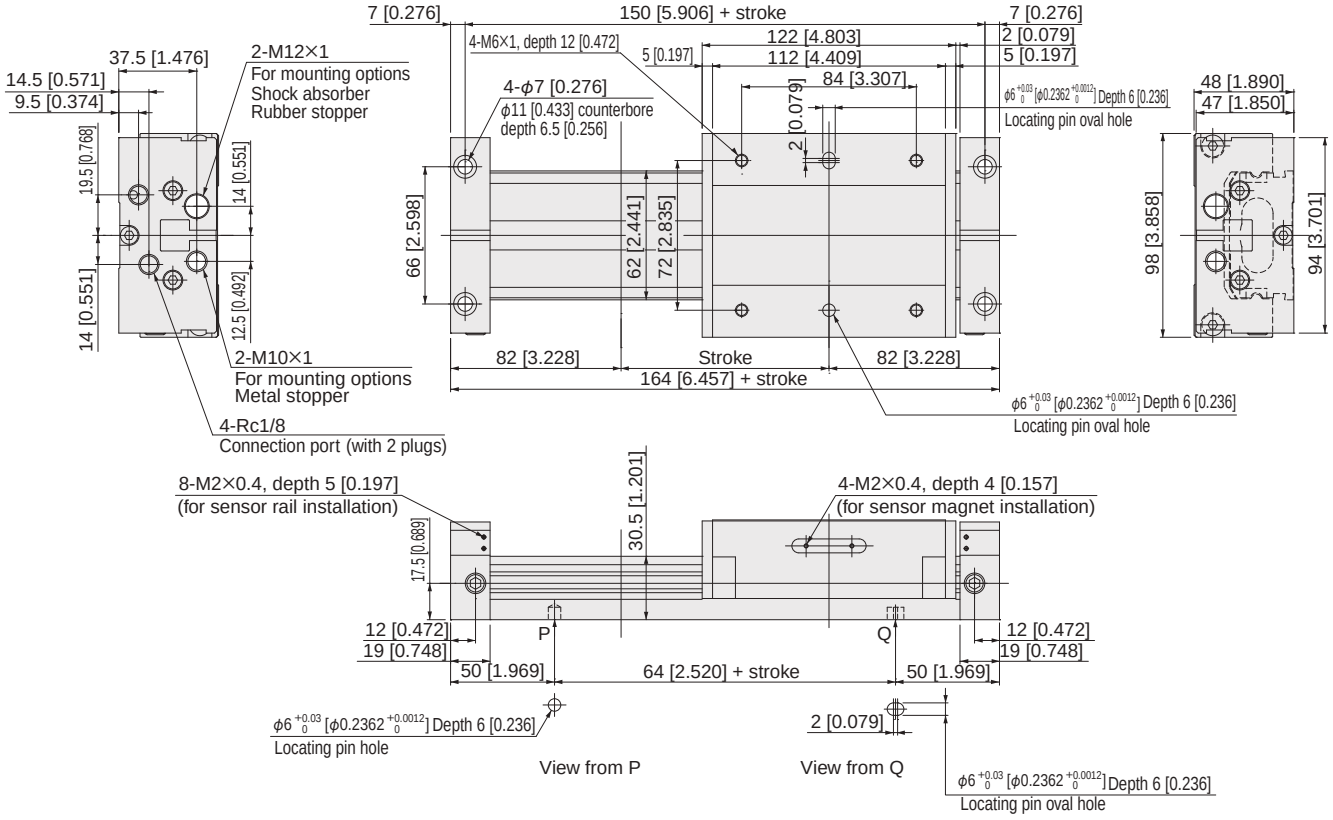

●Shock absorber

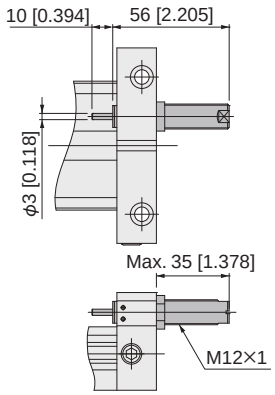

●Rubber stopper

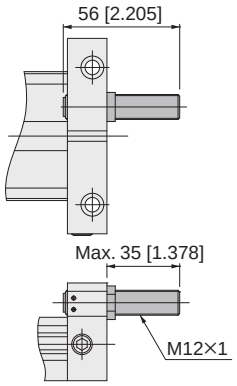

●Metal stopper

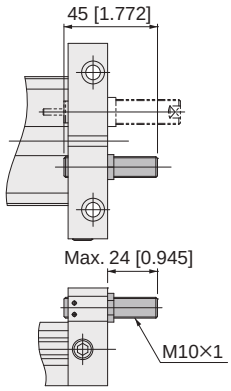

●Sensor rail

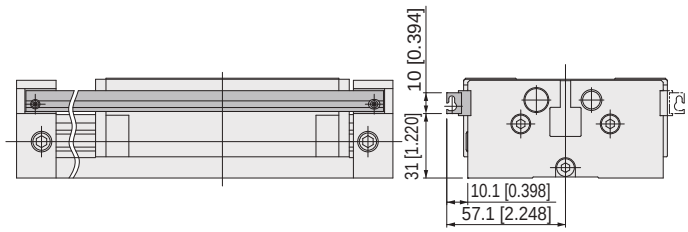

●F-type support

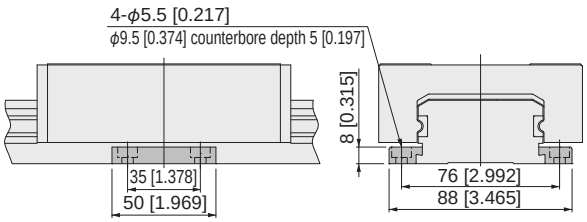

Products equipped with a sensor rail are shipped with the sensor magnet and sensor rail attached to the slider locating pin hole (ϕ6) side.
Refer to page ㉗ about installing the sensor rail and sensor magnets to mount the sensor rail on the opposite side.

Dimensions mm [in]

● Shock absorber

KSHJ6×6-01, -02
H1-KSHJ6×6-01, -02

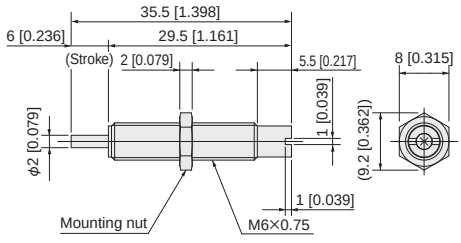

KSHJ8×8-01, -02
H1-KSHJ8×8-01, -02

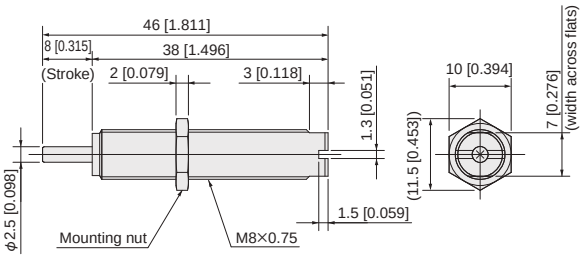

H1-KSHJ10×10-01, -02

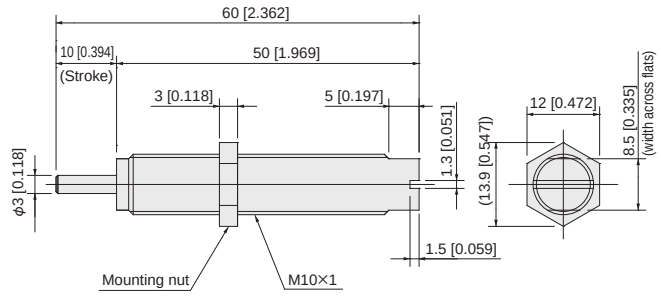

H1-KSHJ12×10-01, -02

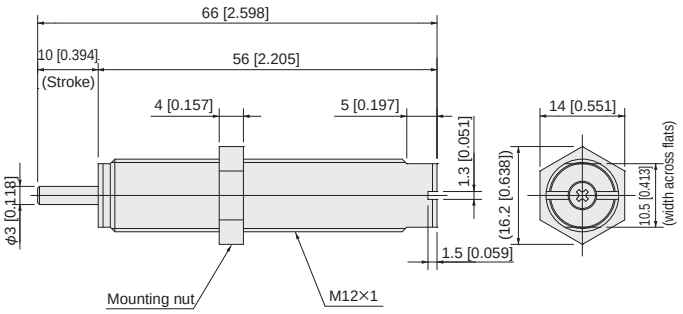

● Rubber stopper

RS-ORB10

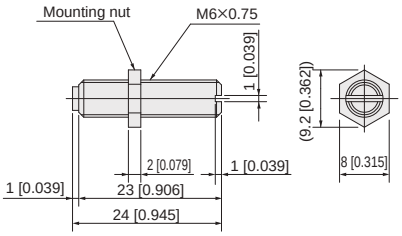

RS-ORB16

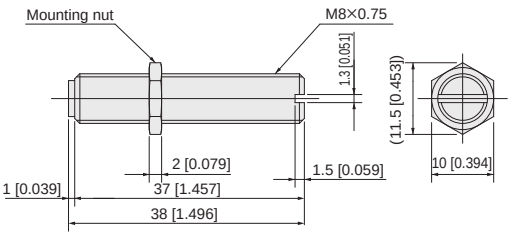

RS-ORB20

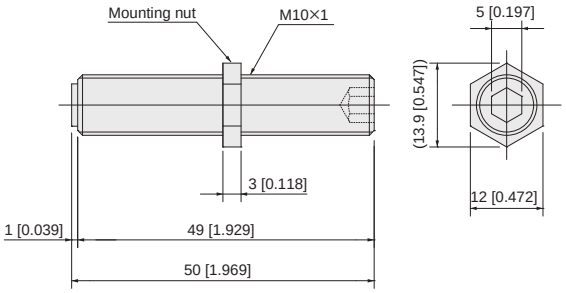

RS-ORB25

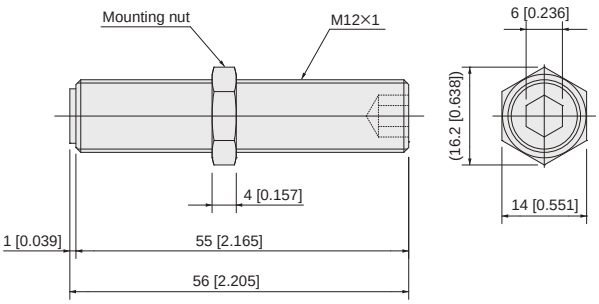

● Metal stopper

MS-ORB10, 16

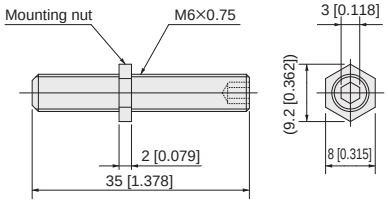

MS-ORB20,25

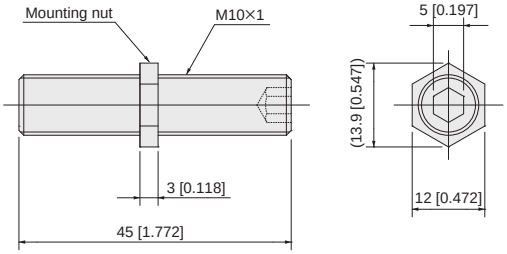

Sensor switches

Solid State Type, Reed Switch Type

●Robot cable is standard equipment

Lead wire flexibility is excellent because the conductor used is the same as for robot cables.

Symbol

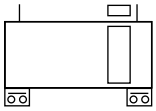

Specifications

● Solid State Type

Item \ Model	ZE135□	ZE155□	ZE175□
Wiring method	2-lead type	3-lead type with NPN output	3-lead type with PNP output
Lead wire direction	Horizontal		
Power supply voltage	—	4.5 to 28 VDC	
Load voltage	10 to 28 VDC	4.5 to 28 VDC	
Load current	2.5 to 20 mA (at 25°C [77 °F], and 10 mA at 60°C [140 °F])	40 mA MAX.	
Consumption current	—	8 mA MAX. (24 VDC)	10 mA MAX (24 VDC)
Internal voltage drop[Note 1]	4V MAX.	2V MAX. (0.8 V max if load is less than 10 mA)	
Leakage current	0.7 mA MAX. (24 VDC, 25°C [77 °F])	50 μA MAX. (24 VDC)	
Response time	1ms MAX.		
Insulation resistance	100 MΩ min. (at 500 VDC megger, between case and lead wire)		
Dielectric strength	500 VAC (50/60 Hz) 1 minute (between case and lead wire)		
Shock resistance[Note 2]	294.2 m/s^2 [30 G] (non-repeated)		
Vibration resistance[Note 2]	88.3 m/s^2 [9 G] (total amplitude of 1.5 mm [0.059 in], 10 to 55 Hz)		
Environmental protection	IP67 (IEC standard), JIS C0920 (watertight type)		
Operation indicators	When ON, a red LED indicator lights up		
Lead wire[Note 3]	PCCV 0.2 SQ x 2-wire (brown and blue) x ℓ□	PCCV 0.15 SQ x 3-wire (brown, blue, and black) x ℓ	
Ambient temperature	0 to 60°C [32 to 140 °F]		
Storage temperature range	–10 to 70°C [14 to 158 °F]		
Mass	15 g [0.53 oz] (for lead wire length A: 1000 mm [39 in]), 35 g [1.23 oz] (for lead wire length B: 3000 mm [118 in]), 15 g [0.53 oz] (for lead wire length 300 mm [11.8 in] with M8 connector)		

NOTE 1: Internal voltage drop changes with the load current.
2: According to Koganei test standards.
3: Lead wire length ℓ: A; 1000 mm [39 in], B; 3000 mm [118 in], G; 300 mm [11.8 in] with M8 connector only on the **ZE175**□

※This product is not resistant to lightning surge of the EMC standard (EN61000-6-2･EN60947-5-2).Prepare protection measures for lightning surge in the system.

● Reed Switch Type

Item \ Model	ZE101		ZE102	
Wiring method	2-lead type			
Lead wire direction	Horizontal			
Load voltage	5 to 28 VDC	85 to 115 VAC (rms)	10 to 28 VDC	85 to 115 VAC (rms)
Load current	40 mA MAX.	20 mA MAX.	5 to 40 mA	5 to 20 mA
Internal voltage drop[Note 1]	0.1V MAX. (at load current 40 mA DC)		3.0V MAX.	
Leakage current	0 mA			
Response time	1ms MAX.			
Insulation resistance	100 MΩ min. (at 500 VDC megger, between case and lead wire)			
Dielectric strength	1500 VAC (50/60 Hz) 1 minute (between case and lead wire)			
Shock resistance[Note 2]	294.2 m/s^2 [30 G] (non-repeated)			
Vibration resistance[Note 2]	88.3 m/s^2 [9 G] (total amplitude of 1.5 mm [0.059 in], 10 to 55 Hz), resonance frequency 2750 ±250 Hz			
Environmental protection	IP67 (IEC standard), JIS C0920 (watertight type)			
Operation indicators	None		When ON, a red LED indicator lights up	
Lead wire[Note 3]	PCCV 0.2 SQ x 2-wire (brown and blue) x ℓ			
Ambient temperature	0 to 60°C [32 to 140 °F]			
Storage temperature range	–10 to 70°C [14 to 158 °F]			
Contact protection measure	Required (see page ㉘ under contact protection.)			
Mass	15 g [0.53 oz] (for lead wire length A: 1000 mm [39 in]), 35 g [1.23 oz] (for lead wire length B: 3000 mm [118 in])			

NOTE 1: Internal voltage drop changes with the load current.
2: According to Koganei test standards.
3: Lead wire length ℓ : A; 1000 mm [39 in], B; 3000mm [118 in]

Sensor switches

Two-color LED solid state type

●Robot cable is standard equipment

Lead wire flexibility is excellent because the conductor used is the same as for robot cables.

Symbol

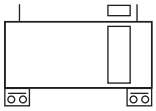

Specifications

●Two-color LED solid state type

Item \ Model	ZE137	ZE157	ZE177
Wiring method	2-lead type	3-lead type with NPN output	3-lead type with PNP output
Lead wire direction	Horizontal		
Power supply voltage	—	4.5 to 28 VDC	
Load voltage	10 to 28 VDC	4.5 to 28 VDC	
Load current	2.5 to 20 mA (at 25°C [77 °F], and 10 mA at 60°C [140 °F])	40 mA MAX.	
Consumption current	—	8 mA MAX. (24 VDC)	10 mA MAX (24 VDC)
Internal voltage drop[Note 1]	4V MAX.	2V MAX. (0.8 V max if load is less than 10 mA)	
Leakage current	0.7 mA MAX. (24 VDC, 25°C [77 °F])	50 μA MAX. (24 VDC)	
Response time	1ms MAX.		
Insulation resistance	100 MΩ MIN. (at 500 VDC megger, between case and lead wire)		
Dielectric strength	500 VAC (50/60 Hz) 1 minute (between case and lead wire)		
Shock resistance[Note 2]	294.2 m/s² [30 G] (non-repeated)		
Vibration resistance[Note 2]	88.3 m/s² [9 G] (total amplitude of 1.5 mm [0.059 in], 10 to 55 Hz)		
Environmental protection	IP67 (IEC standard), JIS C0920 (watertight type)		
Operation indicators	Appropriate operation range: Green LED indicator lit when on, operation range: Red LED indicator lit when on		
Lead wire[Note 3]	PCCV 0.2 SQ x 2-wire (brown and blue) x ℓ	PCCV 0.15 SQ x 3-wire (brown, blue, and black) x ℓ	
Ambient temperature	0 to 60°C [32 to 140 °F]		
Storage temperature range	–10 to 70°C [14 to 158 °F]		
Mass	15 g [0.53 oz] (for lead wire length A: 1000 mm [39 in]), 35 g [1.23 oz] (for lead wire length B: 3000 mm [118 in]), 15 g [0.53 oz] (for lead wire length 300 mm [11.8 in] with M8 connector)		

NOTE 1: Internal voltage drop changes with the load current.
2: According to Koganei test standards.
3: Lead wire length ℓ: A; 1000 mm [39 in], B; 3000 mm [118 in], G; 300 mm [11.8 in] with M8 connector only on the **ZE177**□

Operation

●Explanation of operation of two-color LED solid state type

ZE137□、**ZE157**□、**ZE177**□

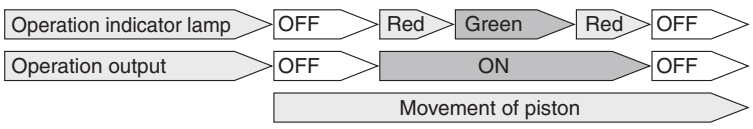

Note: The operating output may become unstable, due to the effects of the operating and installation environments, even if the appropriate operating range (green LED indicator lit) is fixed.

Diagram of inner circuits

● Solid State Type

●ZE135□

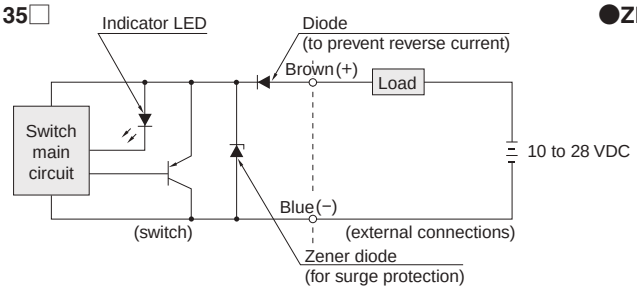

●ZE155□

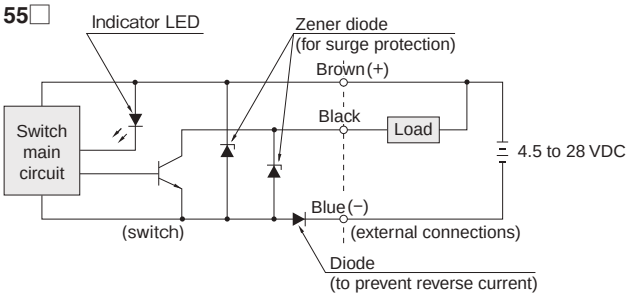

●ZE175□

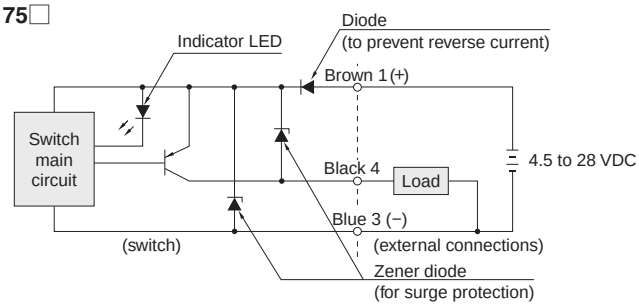

●Two-color LED solid state type

●ZE137□

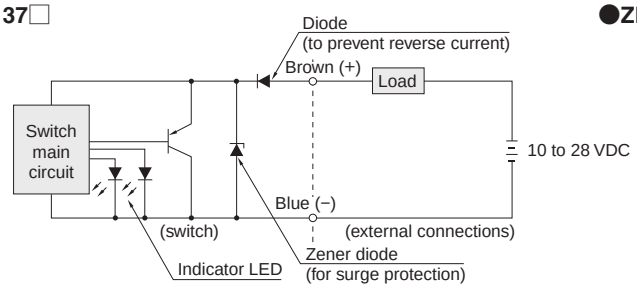

●ZE157

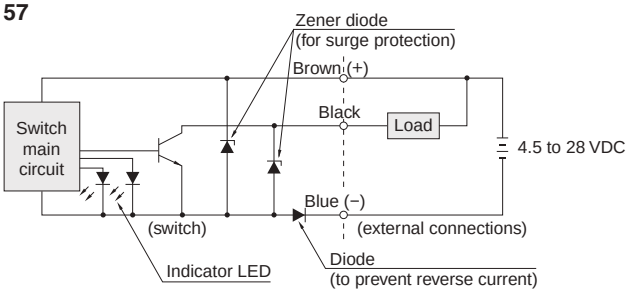

●ZE177□

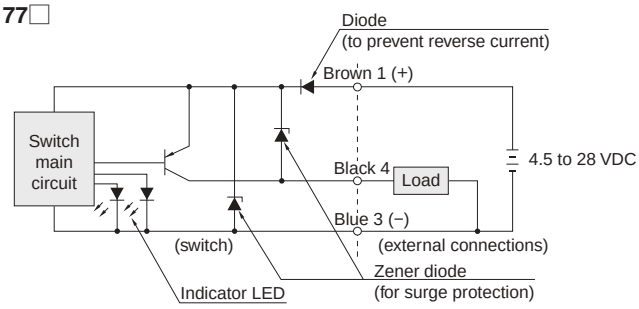

● Reed Switch Type

●ZE101□

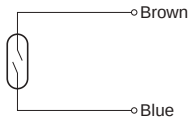

●ZE102□

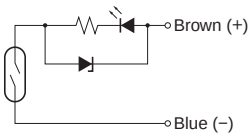

Sensor Switch Dimensions mm [in]

● Horizontal lead wire

●Solid state (ZE135□, ZE155□, ZE175□, ZE137□, ZE157□, ZE177□)

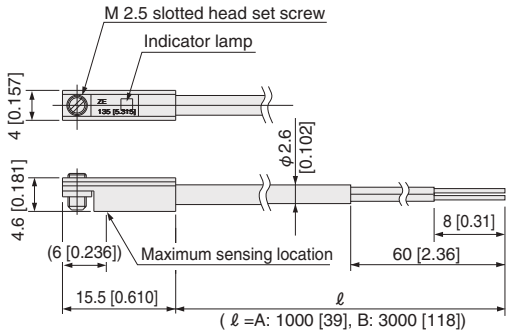

●Reed switch (ZE101□, ZE102□)

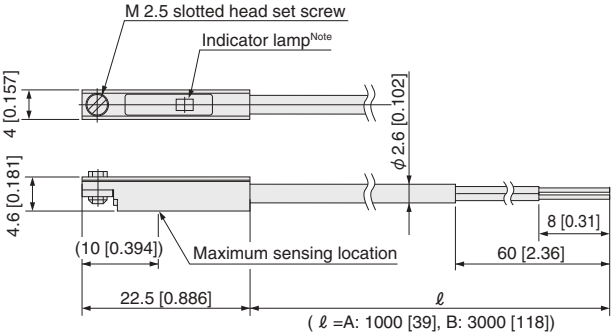

●Solid state (ZE175G, ZE177G)

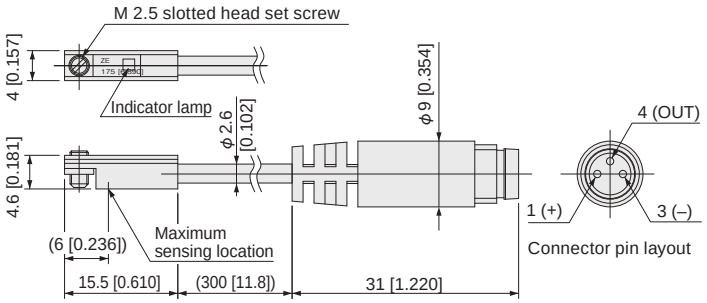

Note: Not available with the **ZE101**□.

Sensor Switch Operating Range, Response Differential, and Maximum Sensing Location

●Operating range: ℓ

The range from where the piston turns the switch on and the point where the switch is turned off as the piston travels in the same direction.

●Response differential: C

The distance between the point where the piston turns the switch on and the point where the switch is turned off as the piston travels in the opposite direction.

● Reed Switch Type

mm [in]

Model	ORB10	ORB16	ORB20	ORB25
Operating range: ℓ	6.5 to 8.5 [0.256 to 0.335]	6.5 to 8 [0.256 to 0.315]	6.5 to 8 [0.256 to 0.315	6.5 to 8 [0.256 to 0.315
Response differential: C	1 [0.039] or less	1 [0.039] or less	1 [0.039] or less	1 [0.039] or less
Maximum sensing location*	10 [0.394]			

Remark: The values in the table above are reference values.
* The value from the opposite end of the lead wire.

● Solid State Type

mm [in]

Model	ORB10	ORB16	ORB20	ORB25
Operating range: ℓ	3 to 5 [0.118 to 0.197]	3 to 5 [0.118 to 0.197]	3 to 5 [0.118 to 0.197]	3 to 5 [0.118 to 0.197]
Response differential: C	1 [0.039] or less	1 [0.039] or less	1 [0.039] or less	1 [0.039] or less
Maximum sensing location*	6 [0.236]			

Remark: The values in the table above are reference values.
* The value from the opposite end of the lead wire.

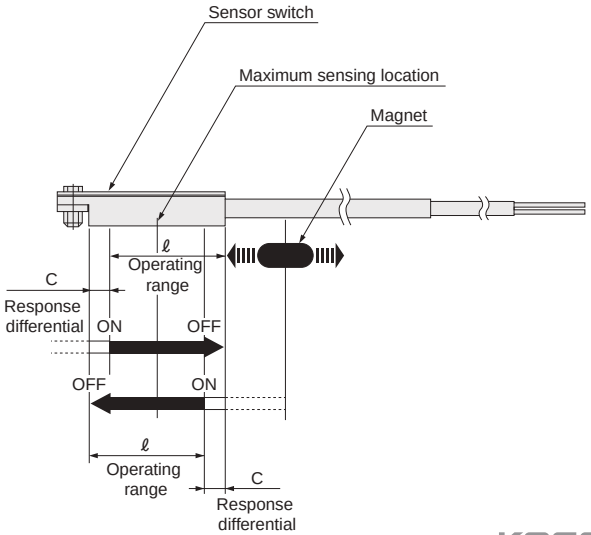

Mounting the Sensor Rail and Sensor Magnet

The ORB series cylinders have tapped holes on both sides for mounting the sensor rail and the sensor magnet. Tighten the screws to the torque shown in the following table when mounting the following parts.

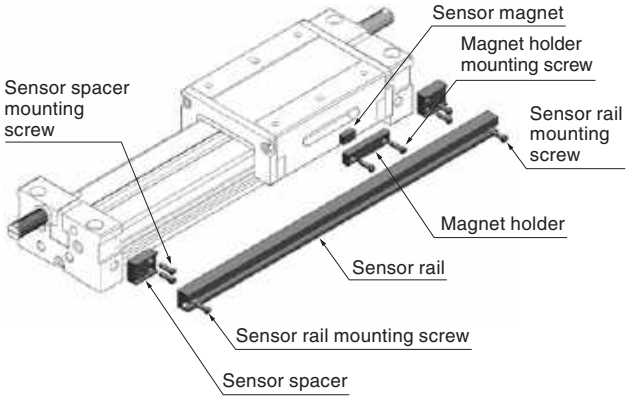

Screw	Tightening torque N·m [in·lbf]
M2 × 0.4	0.25 [2.21]

Moving Sensor Switch

Loosening the screw allows the sensor switch to be moved along the switch mounting groove of the sensor rail.

● **Screw tightening torque**
0.1 N·m to 0.2 N·m [0.9 to 1.8 in·lbf]

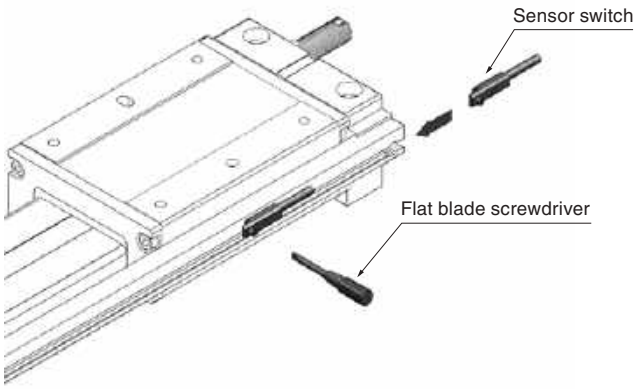

Precautions on mounting orientation of the sensor magnet and sensor spacer

Install the sensor magnet so the black line on the bottom is visible.
Also, install the sensor spacer so the sensor rail mounting hole is on the bottom.

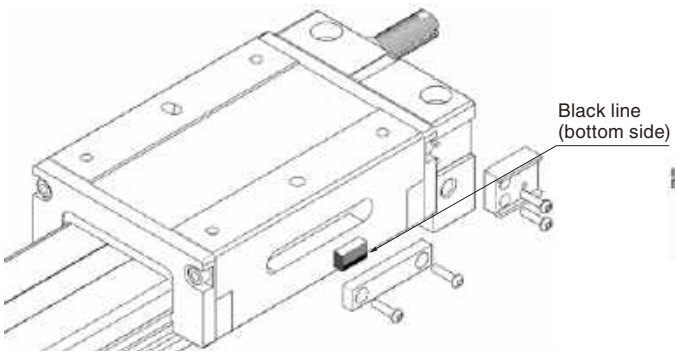

Sensor magnet mounting orientation

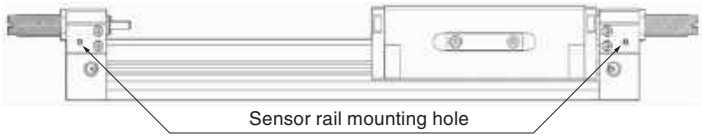

Sensor spacer mounting orientation

Mounting Position of the End of Stroke Detection Sensor Switch

Mounting the sensor switch in the locations shown in the diagram, the magnet comes to the maximum sensing location of the sensor at the end of the stroke and results in stable operation.

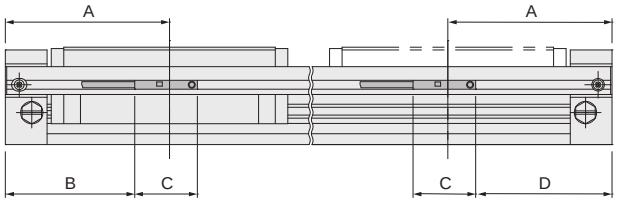

● **Reed Switch Type** mm [in]

Model	A	B	C	D
ORB10	50.5 [1.988]	38 [1.496]	22.5 [0.886]	40.5 [1.594]
ORB16	58.5 [2.303]	46 [1.811]		48.5 [1.909]
ORB20	73 [2.874]	60.5 [2.382]		63 [2.48]
ORB25	82 [3.228]	69.5 [2.736]		72 [2.835]

● **Solid State Type** mm [in]

Model	A	B	C	D
ORB10	50.5 [1.988]	41 [1.614]	15.5 [0.610]	44.5 [1.752]
ORB16	58.5 [2.303]	49 [1.929]		52.5 [2.067]
ORB20	73 [2.874]	63.5 [2.5]		67 [2.638]
ORB25	82 [3.228]	72.5 [2.854]		76 [2.992]

Contact Protection for Reed Switch Type Sensor Switch

In order to use the reed switch type sensor switch safely, take the contact protection measures listed below.

●For connecting an inductive load (electromagnetic relay)

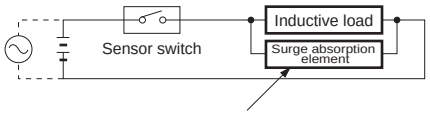

For DC: Diode or CR, etc.
For AC: CR etc.
Diode: Forward current should be more than the circuit current and the reverse voltage should be 10 times greater or more than the circuit voltage.

C: 0.01 to 0.1 µF
R: 1 to 4 kΩ

●For capacitative surges

(When the lead wire length exceeds 10 m [32.8 ft])

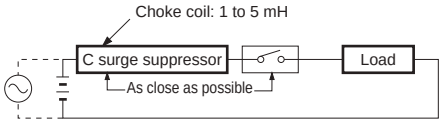

Wiring instructions for the solid state sensor switches

●2-lead type

● Basic connection

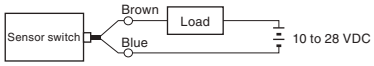

●Connection to relays

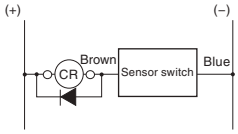

AND (series) connection and OR (parallel) connection

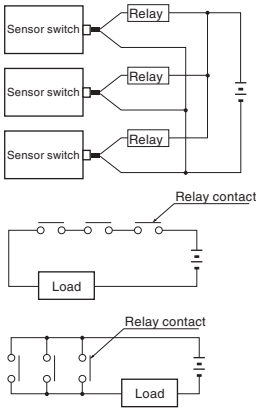

●Connection to solenoid valve

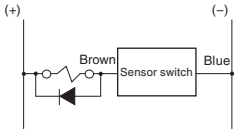

●Connection to programmable controller

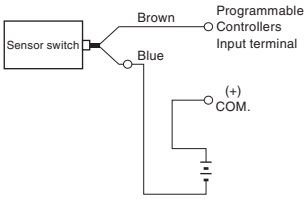

●3-lead type with NPN output

● Basic connection

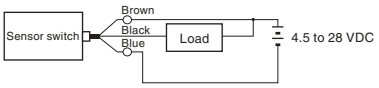

●Connection to relays

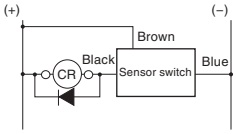

AND (series) connection and OR (parallel) connection

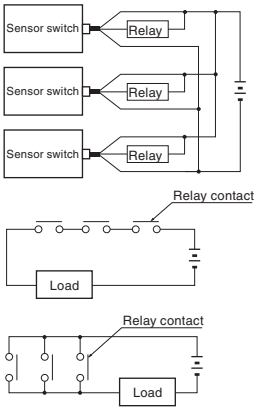

●Connection to solenoid valve

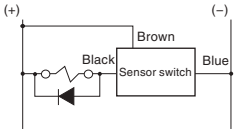

●Connection to programmable controller

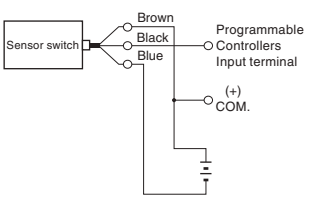

●3-lead type with PNP output

● Basic connection

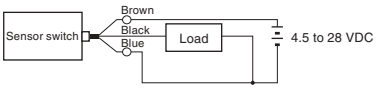

●Connection to relays

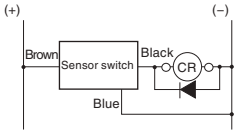

AND (series) connection and OR (parallel) connection

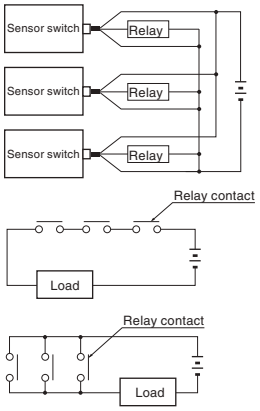

●Connection to solenoid valve

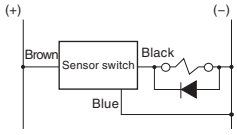

●Connection to programmable controller

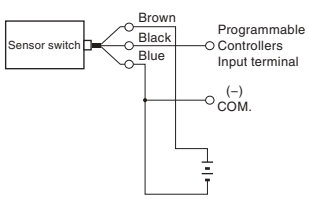

CAUTION

1. Connect the lead wires according to their color. Incorrect wiring will cause damage to the sensor switch since there is no overcurrent protection.
2. The use of a surge protection diode is recommended with the inductive load such as an electromagnetic relay.
3. Avoid the use of AND (series) connections because the circuit voltage will drop in proportion to the number of sensor switches.
4. When using an OR (parallel) connection, it is possible to connect sensor switch outputs directly (ex: pairs of black lead wires). Be aware of load return errors since current leakage increases with the number of switches.
5. Because the sensor switches are magnetically sensitive, avoid using them in locations subject to strong external magnetic fields or bringing them in close proximity to power lines and areas where large electric currents are present. Also avoid using magnetic material for any parts used for mounting. It could result in erratic operation.
6. Do not excessively pull on or bend the lead wires.
7. Avoid using the switches in environments where chemicals or gas are present.
8. Consult the nearest Koganei sales office for use in environments subject to water or oil.

Limited Warranty

KOGANEI CORP. warrants its products to be free from defects in material and workmanship subject to the following provisions.

Warranty Period The warranty period is 180 days from the date of delivery.

Koganei Responsibility If a defect in material or workmanship is found during the warranty period, KOGANEI CORP. will replace any part proved defective under normal use free of charge and will provide the service necessary to replace such a part.

Limitations

- This warranty is in lieu of all other warranties, expressed or implied, and is limited to the original cost of the product and shall not include any transportation fee, the cost of installation or any liability for direct, indirect or consequential damage or delay resulting from the defects.
- KOGANEI CORP. shall in no way be liable or responsible for injuries or damage to persons or property arising out of the use or operation of the manufacturer's product.
- This warranty shall be void if the engineered safety devices are removed, made inoperative or not periodically checked for proper functioning.
- Any operation beyond the rated capacity, any improper use or application, or any improper installation of the product, or any substitution upon it with parts not furnished or approved by KOGANEI CORP., shall void this warranty.
- This warranty covers only such items supplied by KOGANEI CORP. The products of other manufacturers are covered only by such warranties made by those original manufacturers, even though such items may have been included as the components.

The specifications are subject to change without notice.

URL http://www.koganei.co.jp

E-mail: overseas@koganei.co.jp

KOGANEI CORPORATION

OVERSEAS DEPARTMENT
3-11-28, Midori-cho, Koganei City, Tokyo 184-8533, Japan
Tel: 81-42-383-7271 Fax: 81-42-383-7276

KOGANEI INTERNATIONAL AMERICA, INC.
39300 Civic Center Dr., Suite 280, Fremont, CA 94538, U.S.A.
Tel : 1-510-744-1626 Fax : 1-510-744-1676

SHANGHAI KOGANEI INTERNATIONAL TRADING CORPORATION
Room 2606-2607, Tongda Venture Building No.1, Lane 600, Tianshan Road, Shanghai, 200051, China
Tel: 86-21-6145-7313 Fax: 86-21-6145-7323

TAIWAN KOGANEI TRADING CO., LTD.
Rm. 2, 13F., No88, Sec. 2, Zhongxiao E. Rd., Zhongzheng Dist., Taipei City 100, Taiwan (ROC)
Tel: 886-2-2393-2717 Fax: 886-2-2393-2719

KOGANEI KOREA CO., LTD.
6F-601, Tower Bldg., 1005, Yeongdeo-dong, Giheung-gu, Yongin-si, Gyeonggi-do, 446-908, Korea
Tel: 82-31-246-0414 Fax: 82-31-246-0415

KOGANEI (THAILAND) CO., LTD.
3300/90, Tower B, Elephant Tower,16th Fl., Phaholyothin Road, Chomphon, Chatuchak, Bangkok 10900, Thailand
Tel: 66-2-937-4250 Fax: 66-2-937-4254

KOGANEI ASIA PTE. LTD.
69 Ubi Road 1, #05-18 Oxley Bizhub, Singapore 408731
Tel: 65-6293-4512 Fax: 65-6293-4513

4/'16 50 ABAB

©KOGANEI CORP. PRINTED IN JAPAN