人と夢をつなぐクリーンテクノロジー

KOGANEI

http://www.koganei.co.jp

Catalog No.BK-C0046

NEW Products

Magnetic Rodless Cylinder

Flat Rodless

● Standard cylinders ● Clean specification cylinders



Magnetic Rodless Cylinder

Flat Rodless Cylinder MRV

Unique oval tube enables **excellent operability, low center of gravity, and prevents rotation.**

Clean Specification Also Available (All Cylinders Supported)
We have set our standard clean specifications for compliance so that cylinder sizes 14, 22, and 28 are equivalent to JIS/ISO Class 5 (FED-STD Class 100 equivalent), 35, 45, and 56 are equivalent to class 6 (FED-STD class 1000 equivalent).

Excellent Operability
Smooth operations possible from 8 to 800 mm/s [0.315 to 31.5 in/sec]
Steady operations in low speed range are now feasible, which was impossible with existing rodless cylinders.

Slim Design Allows Excellent Matching to Guides
Oval tube allows for thin design that reduces slider height by about 30% (in-house comparison). Low flat form is perfect when used in combination with guides.

Cylinder Sizes 12, 22, 28, 35, 45, and 56 in 6 Models
Line up of cylinder sizes that can handle a wide variety of applications ranging from conveying large volumes of items from tiny precision parts to automotive parts.

Direct Mounting Eliminates Wasted Space
Block types used for end plates for better space saving. Installation is possible without mounting brackets.

Excellent for Eliminating Delayed Lifting and Preventing Pop-out

Cylinders Can Be Used Separately

Basic mounting type

- Standard cylinder MRV
- Clean specification cylinder CS-MRV

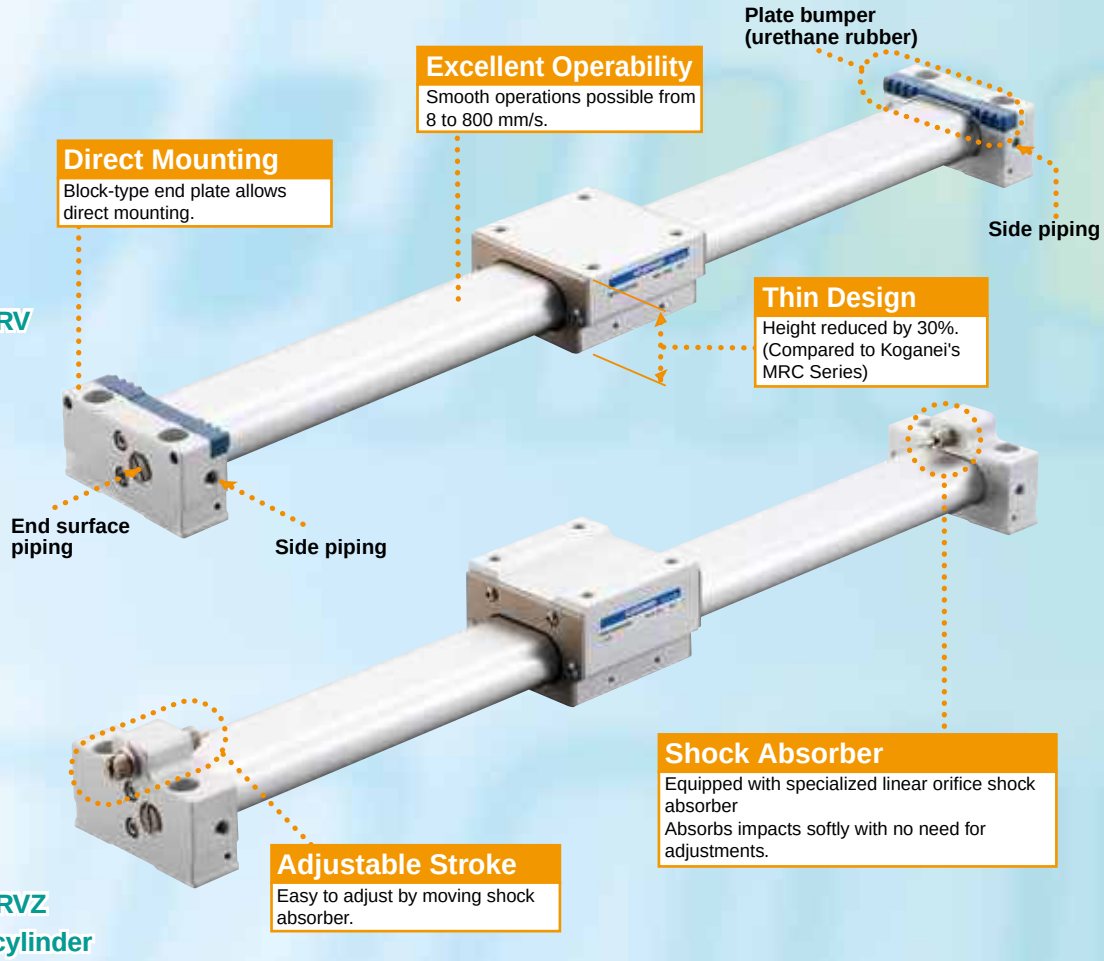

Shock absorber specification

- Standard cylinder MRVZ
- Clean specification cylinder CS-MRVZ

Variations

Basic mounting type



Shock absorber specification



Options

SENSOR SWITCHES



Mounting sensor rail and sensor magnet make it possible to detect positions along entire stroke.

M type mount

(M type mount is not available for clean specifications)



Flexible joints are possible and height is kept minimal by combining with linear guides.

Standard stroke (mm)

1 mm = 0.039 in

Equivalent bore size	14	22	28	35	45	56
Standard cylinder	●	●	●	●	●	●
Clean specification	●	●	●	●	●	●
100	●					
150	●					
200	●	●	●	●	●	●
250	●	●	●	●	●	●
300	●	●	●	●	●	●
350	●	●	●	●	●	●
400	●	●	●	●	●	●
450	●	●	●	●	●	●
500	●	●	●	●	●	●
600		●	●	●	●	●
700		●	●	●	●	●
800		●	●	●	●	●
900				●	●	●
1000				●	●	●
Available stroke	1 to 1000		1 to 1500		1 to 2000	

⚠ CAUTION

Grease is applied to the outer circumference of the tube for the clean room specification flat rodless cylinders. Be sure to wash your hands thoroughly after touching the grease. Grease on your hands can become heated when smoking and can cause grease to adhere to the cigarette, which creates the risk of noxious gas being emitted when the grease burns. Grease that is used on the outside is chemically very stable at normal temperatures, but generates noxious gas at temperatures above 260°C [500°F].
Be sure to read the safety precautions at **the front of the General Personal Catalog** before using this product.

Before selecting and using products, please read all the Safety Precautions carefully to ensure proper product use.
The Safety Precautions shown below are to help you use the product safely and correctly, and to prevent injury or damage to assets beforehand.
Follow the Safety Precautions for: ISO4414 (Pneumatic fluid power-Recommendations for the application of equipment to transmission and control systems), JIS B 8370 (Pneumatic fluid Power-General rules relating to systems regulations)

The directions are ranked according to degree of potential danger or damage: "DANGER!", "WARNING!", "CAUTION!", and "ATTENTION!"

⚠ DANGER	Indicates situations that can be clearly predicted as dangerous. If the noted danger is not avoided, it could result in death or serious injury. It could also result in damage or destruction of assets.
⚠ WARNING	Indicates situations that, while not immediately dangerous, could become dangerous. If the noted danger is not avoided, it could result in death or serious injury. It could also result in damage or destruction of assets.
⚠ CAUTION	Expresses situations that, while not immediately dangerous, could become dangerous. If the noted danger is not avoided, it could result in light or semi-serious injury. It could also result in damage or destruction of assets.
⚠ ATTENTION	While there is little chance of injury, this content refers to points that should be observed for appropriate use of the product.

■ This product was designed and manufactured as parts for use in General Industrial Machinery.

- ■ When selecting and handling equipment, the system designer or another person with sufficient knowledge and experience should always read the safety precautions, catalog, instruction manual and other literature before commencing operation. Making mistakes in handling is dangerous.
- ■ After reading the Owner's Manual, Catalog, etc., always place them where they can be easily available for reference to users of this product.
- ■ If transferring or lending the product to another person, always attach the Owner's Manual, Catalog, etc., to the product where they are easily visible, to ensure that the new user can use the product safely and properly.
- ■ The danger, warning, and caution items listed under these "Safety Precautions" do not cover all possible cases. Read the Catalog and Owner's Manual carefully, and always keep safety first.

⚠ DANGER

- ● Do not use for the applications listed below:
  1. Medical equipment related to maintenance or management of human lives or bodies.
  2. Mechanical devices or equipment designed for the purpose of moving or transporting people.
  3. Critical safety components in mechanical devices.

  This product has not been planned or designed for purposes that require advanced stages of safety. It could cause injury to human life.
- ● Do not use the product in locations with or near dangerous substances, such as flammable or ignitable substances. This product is not explosion-proof. It could ignite or burst into flames.
- ● When mounting the product and workpiece, always firmly support and secure them in place. When mounting a flat rodless cylinder, always mount it by tightening the mounting bolts in the 4 counterbore mounting holes on the end plates.
  If the end plates are not securely fixed, the cylinder tube and end plate joint could disconnect, and result in injury.
- ● Persons using pacemakers or other similar medical devices should maintain a distance of at least one meter [3.281 ft] away from the product. There is a possibility that the pacemaker will malfunction due to the strong magnet built into the product.
- ● Never attempt to remodel the product. It could result in abnormal operation leading to injury, electric shock, fire, etc.
- ● Never attempt inappropriate disassembly, or assembly of the product relating to its basic inner construction, or to its performance or functions. It could result in injury, electric shock, fire, etc.
- ● Do not splash water on the product. Spraying water on the product, washing the product, or using the product under water creates the risk of malfunction, leading to injury, electric shock, fire, etc.
- ● While the product is in operation, avoid touching it with your hands or otherwise approaching too close. Also, do not attempt to make any adjustments to internal or attached mechanisms (sensor switch mounting location, disconnection of piping tubes or plugs, etc.) while the product is in operation.
  The actuator can move suddenly, possibly resulting in injury.
- ● When operating the product, always install speed controllers, and gradually loosen the needle valve from a choked state to adjust the speed increasing.
  Failure to make this adjustment could result in the air supply causing sudden movements, which may put human lives at risk.

⚠ WARNING

- ● Do not use the product in excess of its specification range. Doing so creates the risk of product breakdown, loss of function, or damage. It could also drastically reduce the operating life.
- ● Before supplying air or electricity to the device and before starting operation, always conduct a safety check of the area of machine operation. Unintentional supply of air or electricity could possibly result in electric shock, or in injury caused by contact with moving parts.
- ● Do not touch the terminals and the miscellaneous switches, etc., while the device is powered on. There is a possibility of electric shock and abnormal operation.
- ● Do not throw the product into fire.
  The product could explode and/or produce toxic gases.
- ● Do not sit on the product, place your feet on it, or place other objects on it.
  Accidents such as falling could result in injury. Dropping or toppling the product may result in injury, or it might also damage or break it, resulting in abnormal or erratic operation, runaway, etc.
- ● When conducting any kind of operation for the product, such as maintenance, inspection, repair, or replacement, always turn off the air supply completely and confirm that residual pressure inside the product or in piping connected to the product is zero before proceeding.
  In particular, be aware that residual air will still be in the air compressor or air storage tank. The actuator could abruptly move if residual air pressure remains inside the piping, causing injury.
- ● Do not use the actuator for equipment whose purpose is absorbing the shocks and vibrations of mechanical devices. It could break and possibly result in injury or in damage to mechanical devices.
- ● Avoid scratching the cords for the sensor switch lead wires, etc.
  Allowing the cords to be damaged, bent excessively, pulled, rolled up, placed under heavy objects or squeezed between two objects, may result in current leaks or defective continuity that will lead to fire, electric shock, or abnormal operation.
- ● Do not subject the sensor switch to an external magnetic field during actuator operation. Unintended operations could damage equipment or cause injury.
- ● Use the product within the recommended load and operating frequency specifications. Attempting to use it beyond the recommended load and operating frequency specifications could damage the table, etc., which could result in damage to the equipment or personal injury. It could also drastically reduce the operating life.

⚠ WARNING

- Avoid a control system that will cause the table or a workpiece to drop when the system is abnormal due to an emergency stop, electrical power failure, etc. This could result in damage to the equipment or in personal injury. Always take control measures such as designing a safety circuit or device to prevent the table or workpieces, etc., from dropping in such cases mentioned above.
- Install relief valves, etc., to ensure that the actuator does not exceed its specified pressure when such pressure is rising due to external forces on the actuator. Excessive pressure could lead to a breakdown and damage.
- In initial operations after the equipment has been idle for 48 hours or more, or has been in storage, there is a possibility that contacting parts may stick, resulting in equipment operation delays or sudden movements. For these initial operations, always run a test operation before use to check that operating performance is normal.

⚠ CAUTION

- Grease is applied to the outer circumference of the tube of the flat rodless cylinder. Be sure to wash your hands thoroughly after touching the grease. Smoking a cigarette with hands soiled with grease creates the risk of emission of hazardous gas when grease adhering to the cigarette burns.
- Do not use in locations that are subject to direct sunlight (ultraviolet rays), dust, salt, iron powder, high humidity, or in the media and/or the ambient atmospheres that include organic solvents, phosphate ester type hydraulic oil, sulphur dioxide, chlorine gas, acids, etc. Such uses could lead to loss of functions within a short period, sudden degradation in performance, or reduced operating life.
- When installing the product, leave room for adequate working space around it. Failure to ensure adequate working space will make it more difficult to conduct daily inspections or maintenance, which could eventually lead to system shutdown or damage to the product.
- When transporting or mounting a heavy product, firmly support the product using a lift or support and use multiple people to ensure personal safety.
- Do not bring floppy disks or magnetic media, etc., within 1 meter [3.281 ft] of the product. There is the possibility that the data on the magnetic media will be destroyed due to the magnetism of the magnet.
- Do not use the sensor switch in locations subject to large electrical currents or strong magnetic fields. This could result in erratic operation.
  In addition, do not use magnetized materials in the mounting bracket. The magnetism could leak, possibly resulting in erratic operation.
- Do not place too closely to magnets. Placing it near magnets or in locations subject to large magnetic field will cause erratic operation of sensor switches due to magnetization of the main body and table, or cause failure by adherence of iron powder, etc.
- Never use other companies' sensor switches with these products. Not doing so may cause malfunctions or runaway operation.
- Do not scratch, dent, or deform the actuator by sitting on the product, using it as a scaffold, or placing objects on top of it. It could result in damaged or broken a product that results in operation shutdown or degraded performance.
- Always post an "operations in progress" sign for installations, adjustments, or other operations, to avoid unintentional supplying of air or electrical power, etc. Such accidental supplies may cause electric shock or sudden activation of the product that could result in physical injury.
- Do not pull on the cords of the lead wires, etc., of the sensor switches mounted on the actuators, grab them when lifting or carrying, or place heavy objects or excessive loads on them. Such actions could result in current leaks or defective continuity that leads to fire, electric shock, or abnormal operation.

⚠ ATTENTION

- When considering the possibility of using this product in situations or environments not specifically noted in the Catalog or Instruction Manual, or in applications where safety is an important requirement such as in an aircraft facility, combustion equipment, leisure equipment, safety equipment and other places where human life or assets may be greatly affected, take adequate safety precautions such as the application with enough margins for ratings and performance or fail-safe measure.
  Be sure to consult us with such applications.
- Always check the Catalog and other reference materials for product wiring and piping.
- Use a protective cover, etc., to ensure that human bodies do not come into direct contact with the operating portion of mechanical devices, etc.
- When handling the product, wear protective gloves, safety glasses, safety shoes, etc., to keep safety.
- When the product can no longer be used, or is no longer necessary, dispose of it appropriately as industrial waste.
  Incinerating the special oil in the shock absorber mounted on the flat rodless cylinder generates hydrogen fluoride (HF), which is corrosive and toxic. Because of this, incineration must be done in an acid-resistant incinerator equipped with neutralizing equipment. For large amounts, ask a registered waste disposal company.
- Pneumatic equipment can exhibit degraded performance and function over its operating life. Always conduct daily inspections of the pneumatic equipment, and confirm that all requisite system functions are satisfied, to prevent accidents from happening.
- For inquiries about the product, contact your nearest Koganei sales office or Koganei overseas department. The address and telephone number is shown on the back cover of this catalog.

⚠ Other

- Always observe the following items.

  1. When using this product in pneumatic systems, always use genuine Koganei parts or compatible parts (recommended parts).
  When doing maintenance or repairs, always use genuine Koganei parts or compatible parts (recommended parts).
  Always observe the required methods.

  2. Do not attempt inappropriate disassembly or assembly of the product relating to basic configurations, or its performance or functions.

Koganei cannot be responsible if these items are not properly observed.



Design and selection

⚠ WARNING

1. Check the specifications.
Read the specifications carefully to ensure correct use within the product's specified voltage, current, temperature, and shock ranges, failure to do so could result in a breakdown or defective operation.

2. Avoid mounting actuators in close proximity to each other.
Mounting two or more actuators with sensor switches in close proximity may result in erratic operation of the sensor switches due to magnetic field interference.

3. Be careful about the length of time that the sensor switch is on to detect the position of the stroke.
Be aware that, when the sensor switch is mounted at an intermediate point on the actuator stroke to detect the passing of the piston, if the actuator is moving too fast, the sensor switch does not have enough time to activate, so the load (programmable controller, etc.) may not move.
Maximum cylinder speed for positioning detection

$$V\ \text{mm/s [in/sec]} = \frac{\text{Sensor switch operating range mm [in.]}}{\text{Time required for activating load (ms [ft/sec])}} \times 1000$$

4. Keep wiring as short as possible.
Lead wires for solid state sensor switches should be within 30 m [98.425 ft] as stipulated by EN standards. For reed sensor switches, longer wiring (10 m [32.808 ft] or longer) will lead to a larger capacitive surge, which reduces the operating life of sensor switches.
If long wiring is needed, install the protection circuit mentioned in the Catalog.
If the load is inductive or capacitive, also install the protection circuit mentioned in the Catalog.

5. Avoid repeated bending or excessive pulling of lead wires.
Applying repeated bending stress or tension force on the lead wire could result in wire breakage.

6. Be careful of leakage current.
With 2-lead wire solid-state sensor switches, current (leakage current) flows to the load to activate the internal circuit even when turned off. Ensure that the circuit satisfies the following inequality.
Input off current of programmable controller > Leakage current
If the above inequality cannot be satisfied, select a 3-lead wire solid state sensor switch. Also note that parallel connection of a total of n sensor switches will multiply the amount of leakage current by n times.

⚠ CAUTION

1. Be careful of internal voltage drops in sensor switches.
Connecting reed sensor switches with indicator lamps and 2-lead wire solid state sensor switches in series causes increasing internal voltage drop, so the load may fail to activate. Connecting n pieces of switches will drop the internal voltage by n times as much.
Ensure that the circuit satisfies the following inequality:
Supply voltage – Internal voltage drop × n > Minimum operating voltage for load
In relays with rated voltage of less than 24 VDC, check that the above inequality is satisfied even when n=1.
If the above inequality cannot be satisfied, select a reed sensor switch without an indicator lamp.

2. Do not use Koganei sensor switches with actuators from another company.
The sensor switches are designed for use with Koganei actuators only. Use with actuators from another company may lead to malfunction.



Installation and adjustment

⚠ WARNING

1. During actuator operation, do not subject sensor switches to an external magnetic field.
Unintended operations could damage equipment or cause injury.

⚠ CAUTION

1. Be careful of the environment in which actuators with sensors are installed.
Do not use the sensor switch in locations subject to large electrical currents or strong magnetic fields. This could result in erratic operation. In addition, do not use magnetic material for the mounting bracket, because it will cause erratic operations. This could result in erratic operation.

2. Install sensor switches in the center of their operating range.
Adjust the mounting position of a sensor switch so that the piston stops in the center of its operating range (the range in which the sensor is on). Operations will be unstable if mounted at the end of the operating range (at the boundary near ON or OFF). Also be aware that the operating range will vary with changes in temperature.

3. Follow the tightening torque guidelines for mounting sensor switches.
Over-tightening beyond the allowed tightening torque may damage the mounting threads, mounting brackets, sensor switches and other components. However, insufficient tightening torque may cause the sensor switch position to change, resulting in unstable operation. Follow the instructions on page 23 concerning the tightening torque.

4. Do not carry the actuator by the sensor switch lead wires.
After mounting a sensor switch to an actuator, do not grab the lead wires to carry the actuator. Never do this, as it could result in lead wire disconnections, and could also apply stress to the interior of the sensor switch, resulting in breakage of internal elements.

5. Do not drop the sensor switches or bump them against other objects.
While handling sensor switches, do not subject them to excessive shock (294.2 m/s^2 [30G] or larger) by hitting, dropping or bumping them.
In the case of reed sensor switches, such behavior may cause the contact to malfunction, thereby giving a signal output or turning off the signal instantaneously. It may also cause changes in the contact distance that lead to changes in sensor switch sensitivity and result in erratic operation. Even if the sensor switch case is undamaged, the inner parts of the sensor switch may suffer breakdown and cause erratic operation.



Wiring

⚠ DANGER

1. Prevent nearby moving objects from coming into contact with sensor switches.
When actuators equipped with sensor switches are moving or when moving objects are nearby, do not let them come into contact. In particular, lead wires could become worn out or damaged, causing operating instability in the sensor switch. In the worst case, it could result in current leaks or electric shock.

2. Always turn off the power before doing wiring work.
Doing wiring work while the power is on may result in electric shock. Also, incorrect wiring could damage the sensor switch in an instant. Turn on the power only after the wiring work is completed.

⚠ WARNING

1. Check the catalog and other materials to ensure that the sensor switch is wired correctly.
Miswiring could result in abnormal operation.

2. Do not share wiring with power or high voltage lines.
Avoid wiring in parallel to or shared in the same conduit with power or high voltage lines.
The sensor switch or control circuit may suffer electric noise that results in erratic operation.

3. Avoid repeated bending or excessive pulling of lead wires.
Applying repeated bending stress or tension force on the lead wire could result in wire breakage.

4. Be careful of the wiring polarity.
Do not wire the wrong polarity to sensor switches that have specified polarity (+, —, output). The wrong polarity could result in damage to sensor switches.

⚠ CAUTION

Avoid short-circuiting loads.
Turning a sensor switch on while the load is short-circuited causes overcurrent, which will damage the sensor switch in an instant.
Example of short-circuited load: Sensor switch's output lead wire is directly connected to the power supply.



General precautions

Air supply

1. Use air as the medium. For the use of any other medium, contact your nearest Koganei sales office.

2. Air used for the flat rodless cylinder should be clean air that contains no degraded compressor oil, etc. Install an air filter (filtration of 40 μm or less) near the flat rodless cylinder or valve to remove dust and accumulated liquid. Also drain the air filter periodically. Liquid or dust getting into the flat rodless cylinder may cause defective operations.

Piping

1. Before installing piping for the flat rodless cylinder, always flush the tubes completely by blowing compressed air through them. Machining chips, sealing tape, rust and other debris remaining from the piping work may result in air leaks and malfunctions.

2. When screwing pipes or fittings into the flat rodless cylinder, use the appropriate tightening torque shown below:

Connecting thread	Tightening torque N·m [ft·lbf]
M5×0.8	1.6 [1.180]
Rc1/8	6.9 to 8.8 [5.089 to 6.491]
Rc1/4	11.8 to 13.7 [8.7 to 10.1]

Atmosphere

1. Cover the product when using it in locations where it might be subject to excessive dust or dripping water, dripping oil, etc.

2. This product cannot be used if the medium or ambient atmosphere includes any of the substances below. Organic solvents, phosphate type hydraulic oil, sulfur dioxide gas, chlorine gas, or acids.

Lubrication

The flat rodless cylinder can be used without lubrication. If lubrication is required, contact your nearest Koganei sales office. Do not use turbine oil.

Other

1. The flat rodless cylinder may not move smoothly when operated by hand. This is normal since it is intended to be operated using compressed air. You need to apply air pressure to check the operation of the device.

2. The flat rodless cylinder is equipped with a strong magnet. Do not place magnetic media, data storage devices, or magnetic detection devices, etc. within 1 m [3.281 ft] of the product. Doing so may cause data corruption or malfunctions.

Selection (same for clean specifications)

Allowable load and moment

It is possible to place a load directly on the flat rodless cylinder and use it. However, the load and the moment should not exceed the values in the table below. Furthermore, payloads vary depending on speed, so you also need to check the sections on page 9 regarding rubber bumper capacity and shock absorber capacity before using the product.

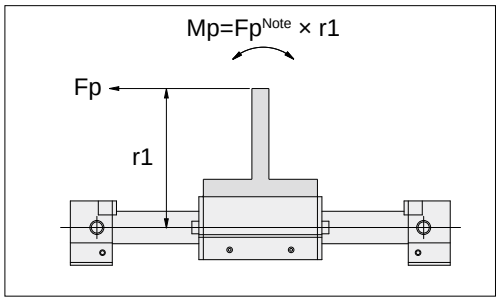

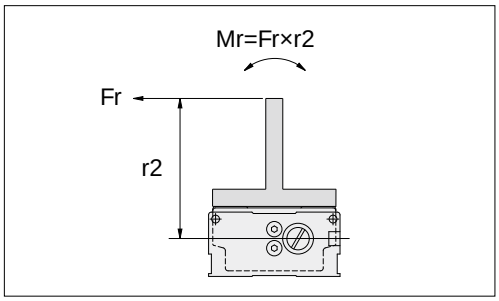

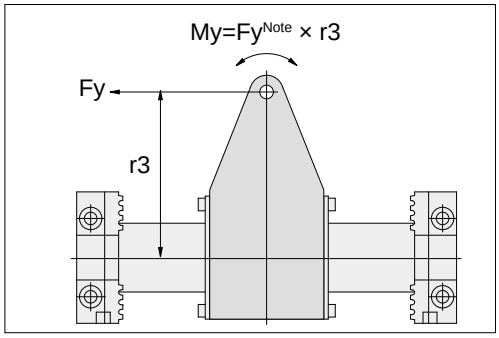

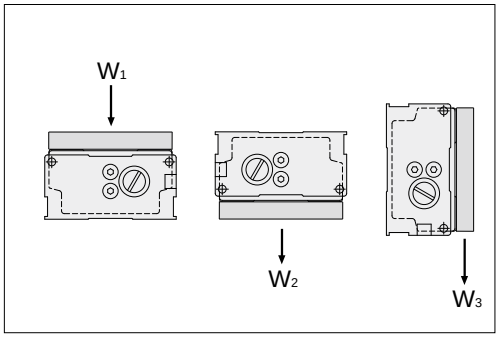

Pitching direction moment: Mp = Fp × r1 (N·m [ft·lbf])
Rolling direction moment : Mr = Fr × r2 (N·m [ft·lbf])
Yawing direction moment : My = Fy × r3 (N·m [ft·lbf])
Maximum payload : W1·W2·W3 (N [lbf])

Caution:External forces Fp and Fy should be 60% or less of the magnetic retaining force.

Moment / Equivalent cylinder diameter mm [in]	Mp N·m [ft·lbf]	Mr N·m [ft·lbf]	My N·m [ft·lbf]	W_1 Note N	W_2 Note N	W_3 Note N
14 [0.551]	1.2 [0.885]	0.3 [0.221]	1.2 [0.885]	30 [6.744]	30 [6.744]	10 [2.248]
22 [0.866]	4 [2.950]	1 [0.738]	4 [2.950]	80 [17.985]	80 [17.985]	30 [6.744]
28 [1.102]	8 [5.901]	2 [1.475]	8 [5.901]	120 [27.0]	120 [27.0]	45 [10.116]
35 [1.378]	14 [10.326]	3.5 [2.582]	14 [10.326]	180 [40.5]	180 [40.5]	70 [15.737]
45 [1.772]	22 [16.227]	5.5 [4.057]	22 [16.227]	260 [58.5]	260 [58.5]	100 [22.5]
56 [2.205]	36 [26.554]	9 [6.638]	36 [26.554]	400 [89.9]	400 [89.9]	140 [31.5]

Note: This is the maximum value for W. W will vary with the stroke, so use the product within the ranges of the “Maximum Payload and Stroke” graphs on the following page.

NOTE Be sure that the above values do not exceed the moment that includes the inertial force generated when the load is moved or stopped.
Also be sure that the mass and speed are within the ranges of the rubber bumper and shock absorber capacity graphs.

● Maximum Payload and Stroke

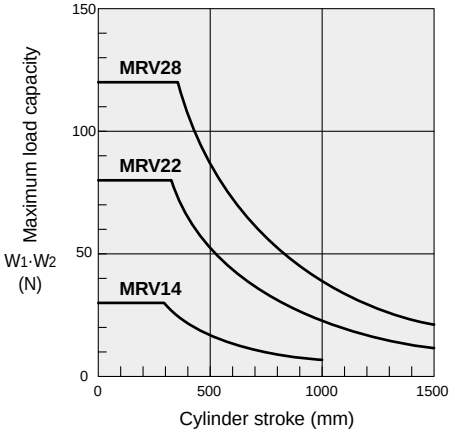

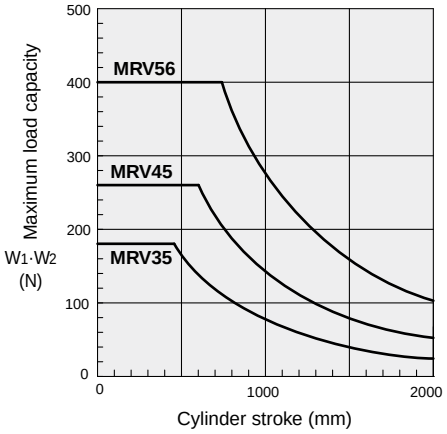

1N=0.225 lbf
1 mm = 0.039 in

● Relationship between the maximum payload and air pressure during vertical operation (reference)

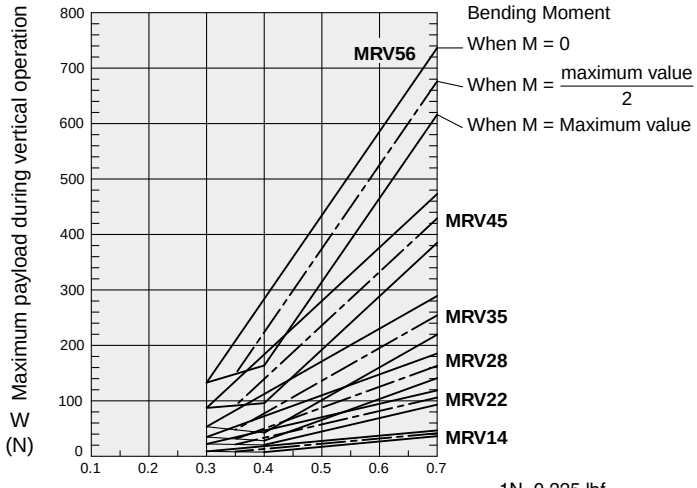

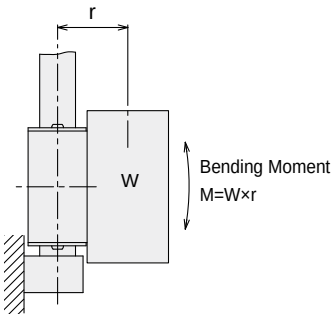

1N=0.225 lbf
1 MPa = 145 psi

Slider Deflection

The table below lists reference values of slider deflection caused by the clearance. Since there is a little play in the slider on the flat rodless cylinder, use it in combination with a linear guide for high precision.

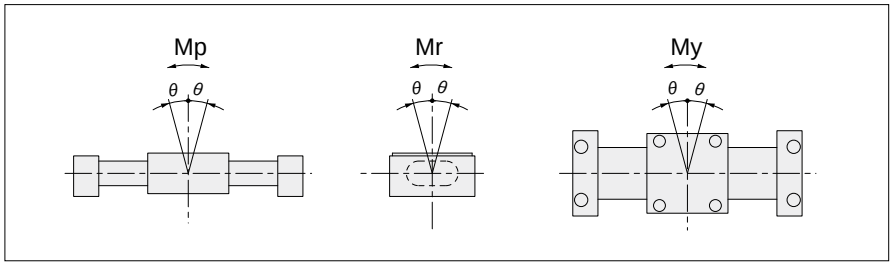

Model	Slider deflection θ (± °)		
	Mp direction	Mr direction	My direction
MRV14	0.7	1.5	0.8
MRV22	0.5	1.0	0.6
MRV28	0.6	1.0	0.7
MRV35	0.5	0.8	0.8
MRV45	0.4	0.7	0.7
MRV56	0.4	0.6	0.6

Cushioning capacity

■ Rubber Bumper Capacity

All of the flat rodless cylinders come with standard rubber bumpers. The maximum payload and impact speed ranges for absorbing kinetic energy are listed below in the “Rubber bumper and shock absorber capacity graph” under “When using a shock absorber.” Do not use the product in excess of the maximum impact speed of 500 mm/s [19.7 in/sec].

■ Shock Absorber Capacity

The flat rodless cylinders can be equipped with optional shock absorbers. The maximum payload and impact speed ranges for absorbing kinetic energy are shown in the following “Rubber bumper and shock absorber capacity graph” under “When using a rubber bumper.” Do not use the product in excess of the maximum impact speed of 800 mm/s [31.5 in/sec].

■ Rubber bumper and shock absorber capacity graph

(Horizontal movement, at air pressure of 0.5 MPa [73 psi])

1N=0.224 lbf
1 mm/s= 0.039 in/sec

● When using a rubber bumper

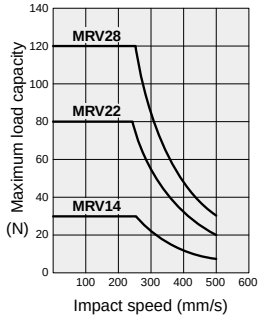

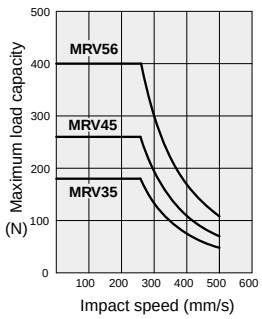

● When using a shock absorber

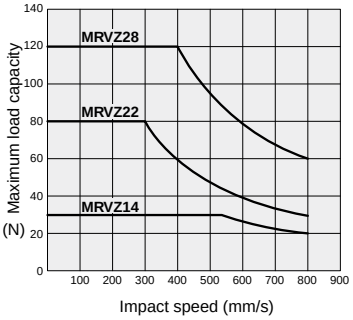

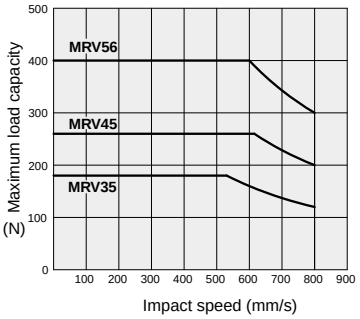

In the graphs, “impact speed” refers to the speed immediately before the slider impacts the rubber bumper or shock absorber.
This is different from the “average speed (cylinder stroke/travel time).”

About intermediate stopping

To use an external stopper, or something, to stop a load midway, the pressure used must be below the operating pressure limit shown in the table on the right.
Note that, using a pressure exceeding the operating pressure limit may disengage the magnetic coupling.

MPa [psi.]

Model	Operating pressure limit for intermediate stopping
MRV14	0.65 [94]
MRV22	0.65 [94]
MRV28	0.65 [94]
MRV35	0.65 [94]
MRV45	0.65 [94]
MRV56	0.65 [94]

Mounting (same for clean specifications)

Mounting

1. Flat rodless cylinders house strong magnets, so they cannot be used where they are exposed to machining chips or cutting oil that contains magnetic materials.
2. Be careful to not dent or scratch the cylinder tube.
3. If an external force larger than the magnetic retaining force is applied and there is a misalignment or separation of the slider and the piston, return the piston to the end of the stroke and restore the slider to its correct location using external force.
4. If the cylinder tube is likely to get dirty where it is being used, clean it periodically.
   After cleaning, be sure to apply grease to the surface of the cylinder tube. Contact your nearest Koganei sales office for information about the type of grease to apply.
5. Mount the cylinder tube without twisting it. If the mounting surface is not flat, the cylinder may twist and result in a malfunction.

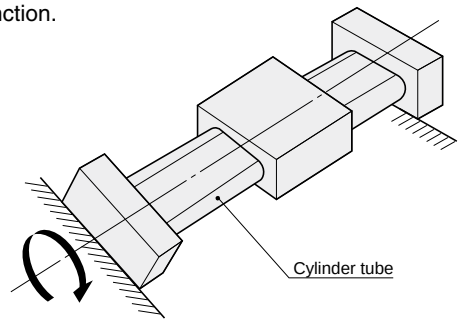

6. When mounting the unit, always put the bolts through the four counterbore bolt holes on the left and right end plates.

Tightening torque N m [ft lbf]

Model	Tightening torque
MRV14	2.8 [2.065] (M4)
MRV22	6 [4.426] (M5)
MRV28	10 [7.376] (M6)
MRV35	
MRV45	20 [14.752] (M8)
MRV56	40 [29.504] (M10)

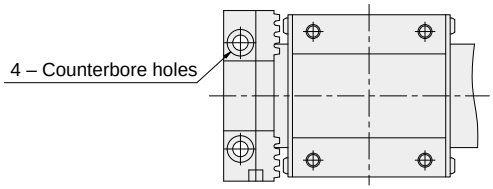

7. Use the M type mount to attach an external guide when using the product. Attaching the guide and slider directly may cause defective operations or malfunctions.

Mounting shock absorbers

Tightening torque for the hex nuts used on the shock absorber N m [ft lbf]

Model	For **MRVZ14**	For **MRVZ22**	For **MRVZ28**	For **MRVZ35**	For **MRVZ45**	For **MRVZ56**
	KSHJM 8x5-14	KSHJM 8x5–22	KSHJM 10x10-28	KSHJM 12x10-35	KSHJM 14x12-45	KSHJM 16x15–56
Tightening torque	2.5 [1.844]		6.5 [4.794]		12.0 [8.851]	20.0 [14.752]

1. Use the shock absorber within its capacity range (see the capacity graph).
2. The maximum impact speed of the shock absorber is 800 mm/s [31.5 in/sec].This differs from the average speed, so do not exceed a speed of 800 m/s [31.5 in/sec] at the time of impact.
3. Do not use the shock absorber in locations where there is excessive dripping water, dripping oil or dust. In these locations, use a cover to prevent water, etc., from directly affecting the unit. Otherwise, it may lead to defective operations and reduce energy absorption.
4. Do not loosen the lock screw on the end of the shock absorber.Oil may leak out from the unit and lead to decreased functionality of the shock absorber.
5. Do not install other shock absorbers on this product.Since each shock absorber's characteristics are different, use of other shock absorbers may damage the cylinder.

Size of piping materials

For the side surface port with sensor rail, the distance to the sensor rail determines the outer diameter of the attached pipe fitting. For an end surface port, the diameter of the counterbore determines the outer diameter of the pipe fitting. Use the values listed below for the outer diameter of the pipe fitting.

Model	Side surface (with sensor rail)	End surface
	A	**B**
MRV14	ϕ10 [0.394]	ϕ10 [0.394]
MRV22	ϕ13 [0.512]	ϕ10 [0.394]
MRV28	ϕ16 [0.630]	—
MRV35	ϕ20 [0.787]	—
MRV45	ϕ28 [1.102]	—
MRV56	ϕ34 [1.339]	—

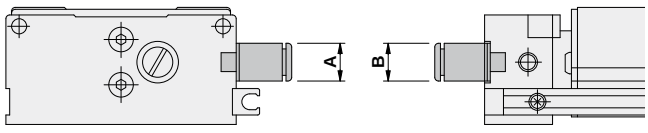

Flat Rodless

Specifications



Symbols

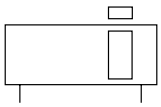

Specifications

Item \ Model		(CS-)MRV14	(CS-)MRV22	(CS-)MRV28	(CS-)MRV35	(CS-)MRV45	(CS-)MRV56
Equivalent cylinder diameter	mm [in.]	14 [0.051]	22 [0.866]	28 [1.102]	35 [1.378]	45 [1.772]	56 [2.205]
Medium		Air[Note 1]					
Operating type		Double acting type					
Operating pressure range	MPa [psi]	0.2 to 0.7 [29 to 102]					
Proof pressure	MPa [psi]	1.05 [152]					
Operating temperature range	°C [°F]	0 to 60 [32 to 140]					
Operating speed range mm/s [in/sec]	Basic mounting type	8 to 500 [0.315 to 19.7][Note 2]					
	Shock absorber specification	8 to 800 [0.315 to 31.5][Note 2]					
Cushion	Basic mounting type	Rubber bumper					
	Shock absorber specification	Shock absorber					
Lubrication		Not required[Note 3]					
Stroke adjustment range (with shock absorber specification only) (per side in specification stroke)	mm [in.]	0 to -10 [0 to -0.394]	0 to -6 [0 to -0.236]	0 to -15 [0 to -0.591]	0 to -21 [0 to -0.827]	0 to -22.5 [0 to -0.886]	0 to -19.5 [0 to -0.768]
Maximum stroke	mm [in.]	1000 [39]	1500 [59][Note 4]		2000 [79][Note 4]		
Stroke tolerance	mm [in.]	+2 [0.079] 0					
Port size		M5×0.8		Rc1/8			Rc1/4

Note 1: Use clean air that contains no moisture, dust, oxidized oil, or other contaminants.
2: For the relationship between the maximum payload and the impact speed, see the rubber bumper and shock absorber capacity graphs on page 9.
3: This product can be used without lubrication. However, to use lubrication, be sure to contact your nearest Koganei sales office. Do not use turbine oil.
4: The maximum stroke with the sensor rail attached is 1000 mm [39 in.].

Magnetic Retaining Force

N [lbf]

Item \ Model	(CS-)MRV14	(CS-)MRV22	(CS-)MRV28	(CS-)MRV35	(CS-)MRV45	(CS-)MRV56
Retaining force	115 [25.9]	310 [69.7]	500 [112.4]	750 [168.6]	1220 [274]	1900 [427]

Shock absorber specification

Item \ Model		(CS-)MRVZ14	(CS-)MRVZ22	(CS-)MRVZ28	(CS-)MRVZ35	(CS-)MRVZ45	(CS-)MRVZ56
Applicable shock absorber		KSHJM 8×5-14	KSHJM 8×5-22	KSHJM 10×10-28	KSHJM 12×10-35	KSHJM 14×12-45	KSHJM 16×16-56
Maximum absorption capacity	J [ft·lbf]	1 [0.738]	1.5 [1.106]	3 [2.213]	6 [4.426]	10 [7.376]	15 [11.064]
Absorption stroke	mm [in.]	5 [0.197]		10 [0.394]		12 [0.472]	15 [0.591]
Maximum impact speed	mm/s [in/sec]	800 [31.5]					
Maximum operating frequency	cycle/min	60				40	
Spring return force (at compressed)	N [lbf]	6 [1.349]		8 [1.798]	7.6 [1.709]	9.2 [2.068]	17.4 [3.912]
Angle variation		1° or less					3° or less
Operating temperature range	°C [°F]	0 to 60 [32 to 140]					

Caution: Shock absorber durability differs depending on how the rodless cylinder is used.

Equivalent cylinder diameter and stroke

mm [in.]

Model \ Item	Standard strokes	Available stroke	Available stroke with sensor rail
(CS-)MRV(Z)14	100 [3.9], 150 [5.9], 200 [7.9], 250 [9.8], 300 [11.8], 350 [13.8], 400 [15.7], 450 [17.7], 500 [19.7]	1 to 1000 [0.039 to 39]	1 to 1000 [0.039 to 39]
(CS-)MRV(Z)22	200 [7.9], 250 [9.8], 300 [11.8], 350 [13.8], 400 [15.7], 450 [17.7], 500 [19.7], 600 [23.6], 700 [27.6], 800 [31.5]	1 to 1500 [0.039 to 59]	
(CS-)MRV(Z)28	200 [7.9], 250 [9.8], 300 [11.8], 350 [13.8], 400 [15.7], 450 [17.7], 500 [19.7], 600 [23.6], 700 [27.6], 800 [31.5]		
(CS-)MRV(Z)35	200 [7.9], 250 [9.8], 300 [11.8], 350 [13.8], 400 [15.7], 450 [17.7], 500 [19.7], 600 [23.6], 700 [27.6], 800 [31.5], 900 [35.4], 1000 [39]	1 to 2000 [0.039 to 79]	
(CS-)MRV(Z)45	200 [7.9], 250 [9.8], 300 [11.8], 350 [13.8], 400 [15.7], 450 [17.7], 500 [19.7], 600 [23.6], 700 [27.6], 800 [31.5], 900 [35.4], 1000 [39]		
(CS-)MRV(Z)56	200 [7.9], 250 [9.8], 300 [11.8], 350 [13.8], 400 [15.7], 450 [17.7], 500 [19.7], 600 [23.6], 700 [27.6], 800 [31.5], 900 [35.4], 1000 [39]		

Note: Non-standard strokes are available at 1 mm [0.039 in.] intervals.

Diagram of Internal Structure (Some Differences for Clean Room Specifications)

●**MRV** (basic type)

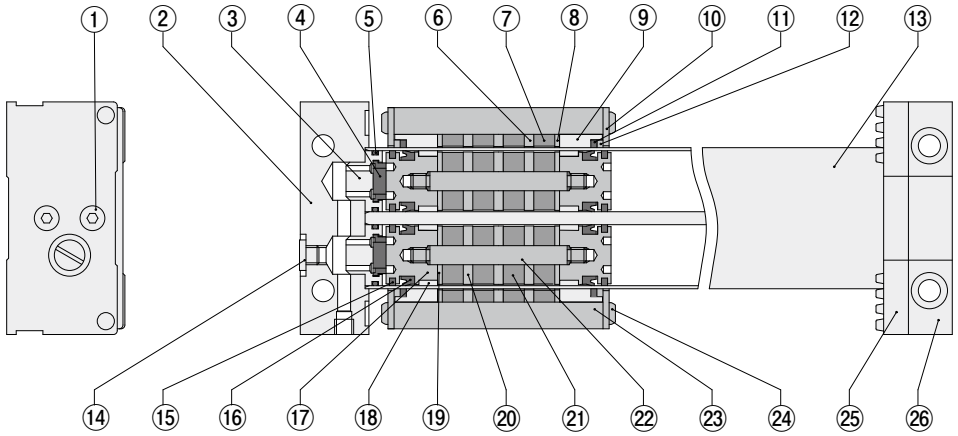

●**MRVZ**(shock absorber specifications)

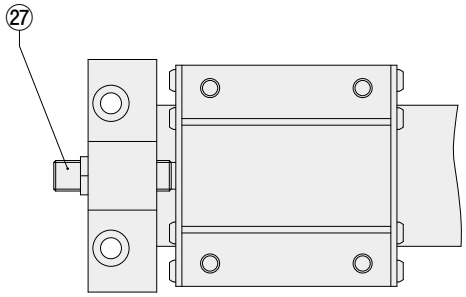

●**MRVS, MRVZS**(with sensor rail)

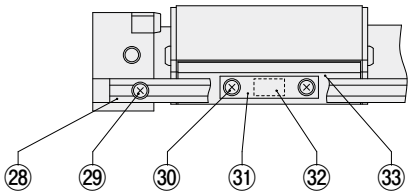

Major parts and materials (some differences for clean room specifications)

No.	Name	Material	Count	Remark
①	Cylinder tube mounting bolt	Stainless steel	4	
②	End plate R	Aluminum alloy	1	Anodized aluminum
③	End pipe	Aluminum alloy	4	
④	Piston bumper	Synthetic rubber (NBR)	4	
⑤	Cylinder gasket	Synthetic rubber (NBR)	4	
⑥	Outer yoke A	Steel	3	Electroless nickel plated
⑦	Outer magnet	Rare-earth magnet	4	
⑧	Outer yoke B	Steel	2	Electroless nickel plated
⑨	Outer wear ring	Specialized resin	2	
⑩	Slider plate	Steel	2	
⑪	Slider wiper	Special rubber	2	
⑫	Spacer	Polyacetal	2	
⑬	Cylinder tube	Aluminum alloy	1	Anodized aluminum
⑭	Plug	Steel	2	
⑮	Piston wiper	Special rubber	4	
⑯	Piston packing	Synthetic rubber (NBR)	4	
⑰	Piston	Aluminum alloy	4	

No.	Name	Material	Count	Remark
⑱	Inner wear ring	Specialized resin	4	
⑲	Inner yoke B	Steel	4	Electroless nickel plated
⑳	Inner yoke A	Steel	6	
㉑	Inner magnet	Rare-earth magnet	8	Electroless nickel plated
㉒	Piston shaft	Stainless steel	2	
㉓	Slider	Aluminum alloy	1	Anodized aluminum
㉔	Slider plate fixing bolt	Stainless steel	4	8 for absorber specification
㉕	Plate Bumper	Urethane rubber	2	
㉖	End plate L	Aluminum alloy	1	Anodized aluminum
㉗	Shock absorber	-	2	
㉘	Sensor rail	Aluminum alloy	1	Anodized aluminum
㉙	Sensor rail fixing bolt	Stainless steel	2	
㉚	Sensor magnet fixing bolt	Stainless steel	2	
㉛	Magnet holder	PBT	1	
㉜	Sensor magnet	Rare-earth magnet	1	
㉝	Shield plate	Steel	1	Electroless nickel plated

Mass

kg [lb.]

Model		Zero stroke mass	Additional mass for each 1mm stroke	Shock absorber		M type mount	Sensor magnet	Sensor rail zero stroke mass	Additional mass per 1 mm [0.039 in] sensor rail	SENSOR SWITCHES	
				One side	Both sides					Lead wire 1 m	Lead wire 3 m
(CS-)MRV(Z)14	Basic mounting type	0.22 [0.485]	0.000267 [0.001]	—	—	0.017 [0.037]	0.004 [0.009]	0.007 [0.015]	0.0001 [0.000]	0.015 [0.033]	0.035 [0.077]
	Shock absorber specification	0.27 [0.595]		0.01 [0.022]	0.02 [0.044]	—					
(CS-)MRV(Z)22	Basic mounting type	0.50 [1.102]	0.000491 [0.001]	—	—	0.03 [0.066]		0.008 [0.018]			
	Shock absorber specification	0.59 [1.301]		0.01 [0.022]	0.02 [0.044]	—					
(CS-)MRV(Z)28	Basic mounting type	0.86 [1.896]	0.000656 [0.001]	—	—	0.052 [0.115]		0.010 [0.022]			
	Shock absorber specification	1.00 [2.205]		0.022 [0.049]	0.044 [0.097]	—					
(CS-)MRV(Z)35	Basic mounting type	1.98 [4.365]	0.001009 [0.002]	—	—	0.077 [0.170]		0.010 [0.022]			
	Shock absorber specification	2.19 [4.828]		0.033 [0.073]	0.066 [0.146]	—					
(CS-)MRV(Z)45	Basic mounting type	3.12 [6.878]	0.001437 [0.003]	—	—	0.109 [0.240]		0.011 [0.024]			
	Shock absorber specification	3.43 [7.562]		0.058 [0.128]	0.116 [0.256]	—					
(CS-)MRV(Z)56	Basic mounting type	5.45 [12.015]	0.002168 [0.005]	—	—	0.201 [0.443]		0.013 [0.029]			
	Shock absorber specification	6.02 [13.272]		0.083 [0.183]	0.166 [0.366]	—					

Note: Sensor switch **ZE175G** is 0.015 kg [0.033 lb]

Theoretical Thrust

N [lbf]

Model	Pressure area mm² [in²]	Air pressure MPa [psi]					
		0.2 [29]	0.3 [44]	0.4 [58]	0.5 [73]	0.6 [87]	0.7 [102]
(CS-)MRV(Z)14	157 [0.2]	31 [6.969]	47 [10.566]	63 [14.163]	79 [17.760]	94 [21.132]	110 [24.7]
(CS-)MRV(Z)22	402 [0.6]	80 [17.985]	121 [27.2]	161 [36.2]	201 [45.2]	241 [54.2]	281 [63.2]
(CS-)MRV(Z)28	628 [1.0]	126 [28.3]	188 [42.3]	251 [56.4]	314 [70.6]	377 [84.8]	440 [98.9]
(CS-)MRV(Z)35	982 [1.5]	196 [44.1]	295 [66.3]	393 [88.3]	491 [110.4]	589 [132.4]	687 [154.4]
(CS-)MRV(Z)45	1608 [2]	322 [72.4]	482 [108.4]	643 [144.6]	804 [180.7]	965 [216.9]	1126 [253]
(CS-)MRV(Z)56	2512 [4]	502 [112.9]	754 [169.5]	1005 [226]	1256 [282]	1507 [339]	1758 [395]

Values in the table are only theoretical. There may be some differences from these in actual applications.
See the thrust efficiency graph to the right for selecting models.
Be aware that low pressure can cause the thrust efficiency to drop.

Thrust efficiency

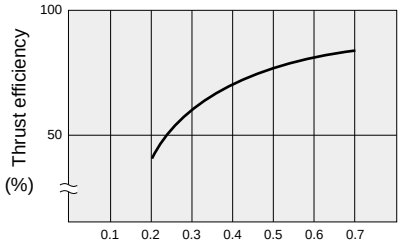

Air flow rate and air consumption

Air consumption of the flat rodless cylinder is calculated using the equation below. However, the simplified chart can make the calculations easier.

Air flow rate: $Q_1 = \frac{\pi D^2}{4} \times L \times \frac{60}{t} \times \frac{P + 0.101}{0.101} \times 10^{-6}$

Air consumption: $Q_2 = \frac{\pi D^2}{4} \times L \times 2 \times n \times \frac{P + 0.101}{0.101} \times 10^{-6}$

Q_1	: Air flow rate required by the cylinder	ℓ/min (ANR) [ft³/min (SCFM)]
Q_2	: Cylinder air consumption	ℓ/min (ANR) [ft³/min (SCFM)]
D	: Equivalent cylinder diameter	mm [in.]
L	: Cylinder stroke	mm [in.]
t	: Time needed for the cylinder to travel 1 stroke	s
n	: Number of cylinder reciprocations per minute	cycles/min
P	: Operating pressure	MPa [psi]

Air consumption for every 1 mm [0.039 in.] of the stroke

cm³/reciprocations (ANR)

Equivalent cylinder diameter mm [in.]	Air pressure MPa [psi]					
	0.2 [29]	0.3 [44]	0.4 [58]	0.5 [73]	0.6 [87]	0.7 [102]
14 [0.551]	0.936	1.246	1.558	1.868	2.180	2.490
22 [0.866]	2.396	3.192	3.988	4.784	5.580	6.378
28 [1.102]	3.744	4.988	6.232	7.476	8.720	9.966
35 [1.378]	5.848	7.792	9.734	11.68	13.62	15.56
45 [1.772]	9.944	12.77	15.95	19.14	22.32	25.51
56 [2.205]	14.97	19.95	24.92	29.90	34.86	39.84

The figures in the table are for computing the air flow rate and air consumption when a flat rodless cylinder makes 1 reciprocation with a stroke of 1 mm [0.039 in.].
Actually required air flow rate and air consumption are calculated with the equations below.

● To calculate air flow. (to select F.R.L., valves, etc.)

Example: When operating a flat rodless cylinder with an equivalent cylinder diameter of 22 mm [0.866 in.], at a speed of 300 mm/s [11.8 in/sec], under air pressure of 0.5 MPa [73 psi].

$4.784 \times \frac{1}{2} \times 300 \times 10^{-3} = 0.71$ ℓ/s (ANR)

(In this case, the flow rate per minute is $4.784 \times \frac{1}{2} \times 300 \times 60 \times 10^{-3} = 43.05$ ℓ/min (ANR).)

● To calculate air consumption.

Example 1: For 1 reciprocation of a flat rodless cylinder with an equivalent cylinder diameter of 22 mm [0.866 in.], a stroke of 100 mm [3.9 in.], and air pressure of 0.5 MPa [73 psi].

$4.784 \times 100 \times 10^{-3} = 0.478$ ℓ/reciprocation (ANR)

Example 2: For 10 reciprocations per minute of a flat rodless cylinder with an equivalent cylinder diameter of 22 mm [0.866 in.], a stroke of 100 mm [3.9 in.], and air pressure of 0.5 MPa [73 psi].

$4.784 \times 100 \times 10 \times 10^{-3} = 4.78$ ℓ/min (ANR)

Note: To calculate the actually required air consumption when using the flat rodless cylinder, add the air consumption of the piping to the air consumption from the above equations.

Order Codes

● Basic Type

CS - **MRV** [ ] **14×200** - [ ] - [ ] [ ] [ ]

Flat rodless
Rubber bumper
specifications

Sensor rail
Blank : No sensor rail
S : With sensor rail
(includes sensor magnet)

Equivalent
cylinder diameter
×
Stroke

Number of sensor switches
1: 1 piece
2: With two sensor switches
3: With three pins
⋮

Lead wire length
A: 1000 mm [39 in.]
B: 3000 mm [118 in.]
G: 300 mm [11.8 in.] with M8 connector (only for ZE175)

Clean specification[Note 1]
Blank : Standard cylinder
CS : Clean System

M type mount[Note 2]
Blank : None
M : M type mount

Sensor switch model
Blank : No sensor switch

ZE135:	2-lead wire solid state switch with indicator lamp		10 to 28 VDC
ZE155:	3-lead wire solid state switch with indicator lamp	NPN output	4.5 to 28 VDC
ZE175:	3-lead wire solid state switch with indicator lamp	PNP output	4.5 to 28 VDC
ZE101:	2-lead wire reed switch without indicator lamp		5 to 28 VDC, 85 to 115 VAC
ZE102:	2-lead wire reed switch with indicator lamp		10 to 28 VDC, 85 to 115 VAC

Note 1: The packaging is the same 1-ply packaging as is used for standard products.
2: M type mount is not available for clean specifications. The M type mount for standard products are provided with the product when shipped.

● Shock Absorber Specifications[Note 3]

CS - **MRVZ** [ ] **14×200** - [ ] - [ ] [ ] [ ]

Flat rodless
Shock absorber
specification

Sensor rail
Blank : No sensor rail
S : With sensor rail
(includes sensor magnet)

Equivalent
cylinder diameter
×
Stroke

Number of sensor switches
1: 1 piece
2: With two sensor switches
3: With three pins
⋮

Lead wire length
A: 1000 mm [39 in.]
B: 3000 mm [118 in.]
G: 300 mm [11.8 in.] with M8 connector (only for ZE175)

Clean specification[Note 1]
Blank : Standard cylinder
CS : Clean System

Number of shock absorbers[Note 3]
K1: 1 piece
K2: 2 pieces

Sensor switch model
Blank : No sensor switch

ZE135:	2-lead wire solid state switch with indicator lamp		10 to 28 VDC
ZE155:	3-lead wire solid state switch with indicator lamp	NPN output	4.5 to 28 VDC
ZE175:	3-lead wire solid state switch with indicator lamp	PNP output	4.5 to 28 VDC
ZE101:	2-lead wire reed switch without indicator lamp		5 to 28 VDC, 85 to 115 VAC
ZE102:	2-lead wire reed switch with indicator lamp		10 to 28 VDC, 85 to 115 VAC

Note 1: The packaging is the same 1-ply packaging as is used for standard products.
2: M type mounts cannot be installed on shock absorber specifications.
3: Shock absorbers are provided with the product when shipped.

Additional Parts

● M type mount

M-MRV [ ]

Equivalent cylinder diameter
14: For **MRV14** **35:** For **MRV35**
22: For **MRV22** **45:** For **MRV45**
28: For **MRV28** **56:** For **MRV56**

● Sensor rail

S-MRV **14×100**

Equivalent cylinder diameter x Stroke
(1 sensor rail, 2 bolts)

● Magnet set

MG-MRV [ ]

Equivalent cylinder diameter
14: For **MRV14** **35:** For **MRV35**
22: For **MRV22** **45:** For **MRV45**
28: For **MRV28** **56:** For **MRV56**
(1 sensor switch, 1 magnet holder, 2 bolts)

● Shock absorber

KSHJM [ ]

Size
8×5-14: For **MRV14**
8×5-22: For **MRV22**
10×10-28: For **MRVZ28**
12×10-35: For **MRV35**
14×12-45: For **MRV45**
16×15-56: For **MRV56**

Dimensions of MRV14 CS-MRV14 (mm [in.])

● Basic type □-**MRV14**× Stroke

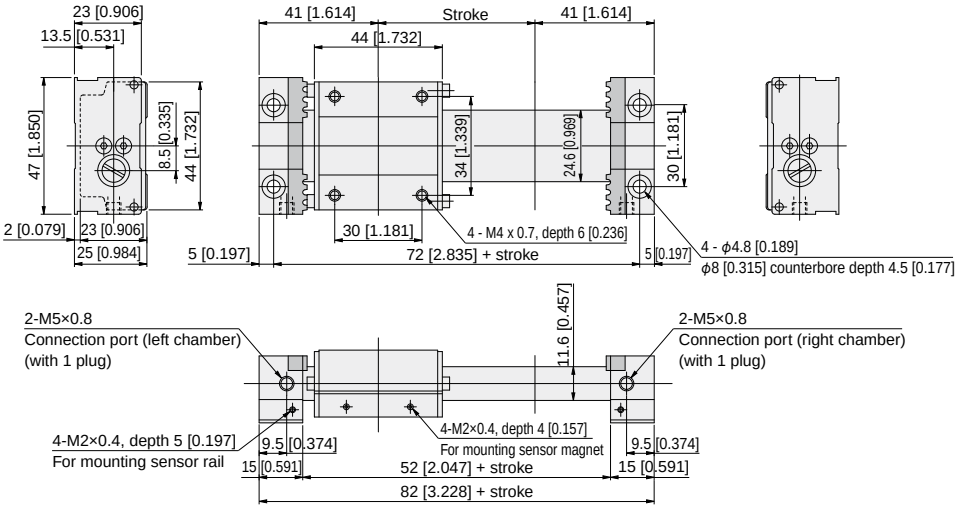

● Shock absorber specifications □-**MRVZ14**× Stroke

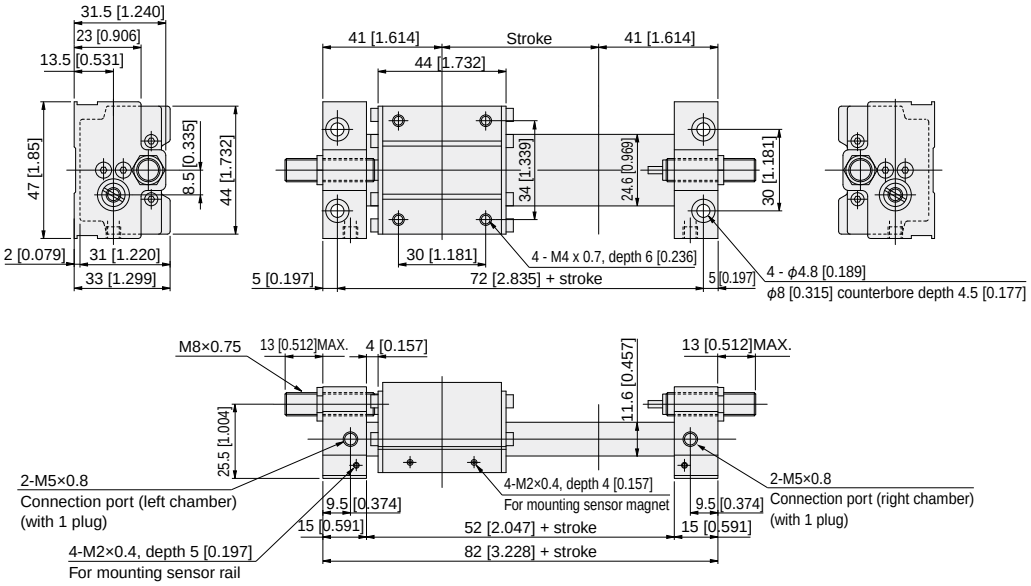

● With sensor rail □-**MRV□S14**× Stroke

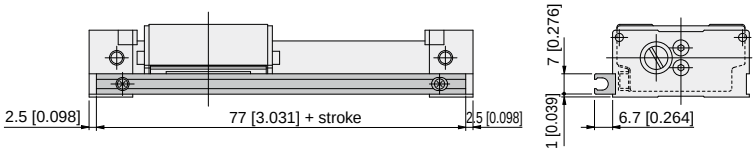

The product, equipped with a sensor rail, is shipped with the sensor magnet and sensor rail attached to the piping port side.

● **M** type mount (not available for clean specifications)

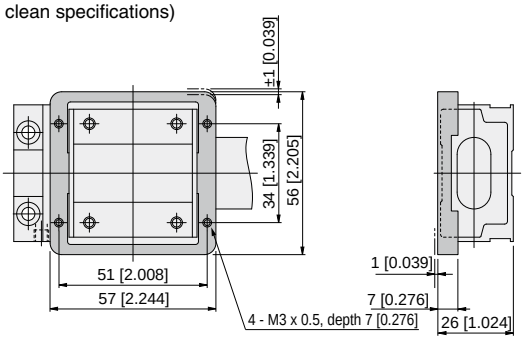

Note: Remove the plate bumper to mount and use the M type mount.

Dimensions of **MRV22 CS-MRV22** (mm [in.])

● Basic type □-**MRV22**× Stroke

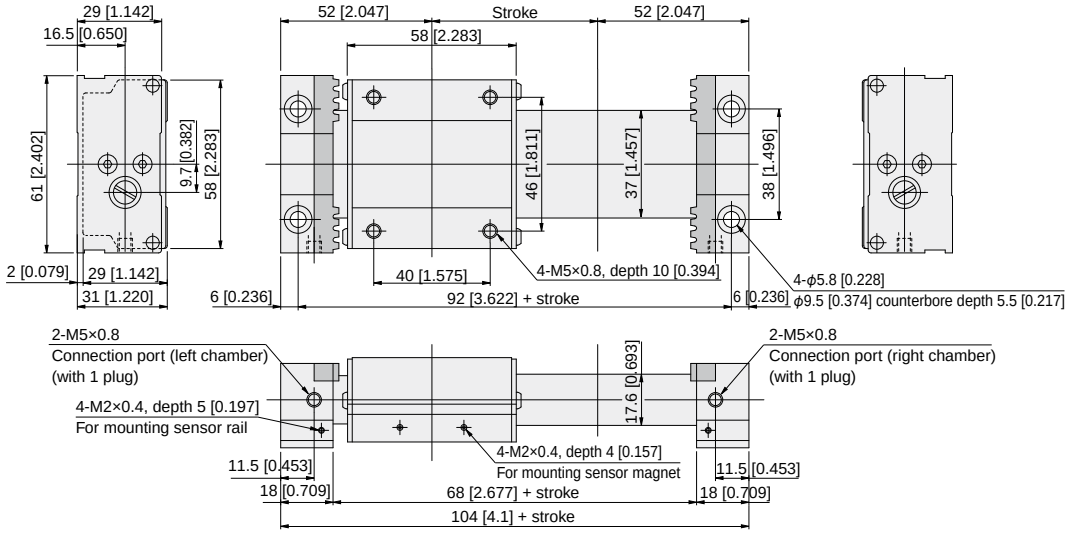

● Shock absorber specifications □-**MRVZ22**× Stroke

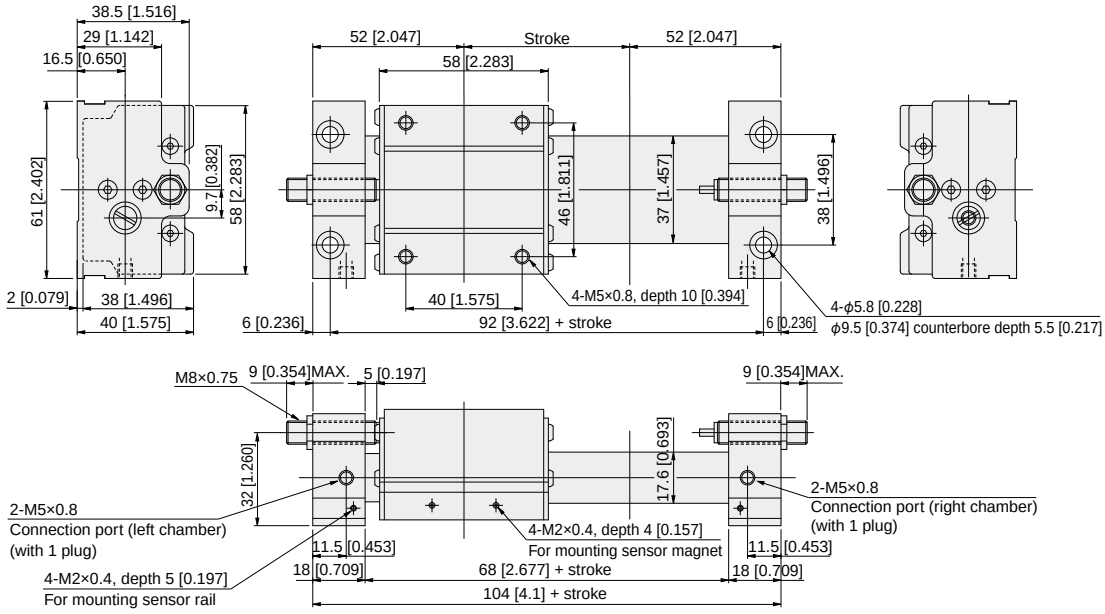

● With sensor rail □-**MRV**□**S22**× Stroke

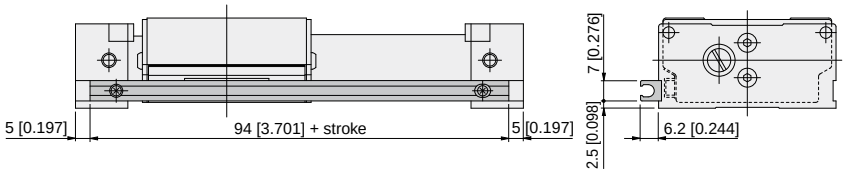

The product, equipped with a sensor rail, is shipped with the sensor magnet and sensor rail attached to the piping port side.

● **M** type mount

(not available for clean specifications)

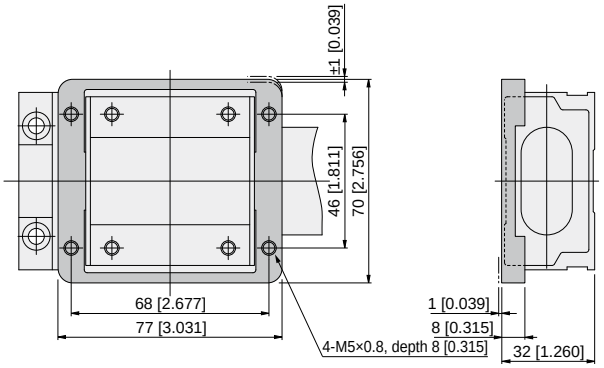

Note: Remove the plate bumper to mount and use the M type mount.

Dimensions of **MRV28 CS-MRV28** (mm [in.])

● Basic type □**-MRV28**× Stroke

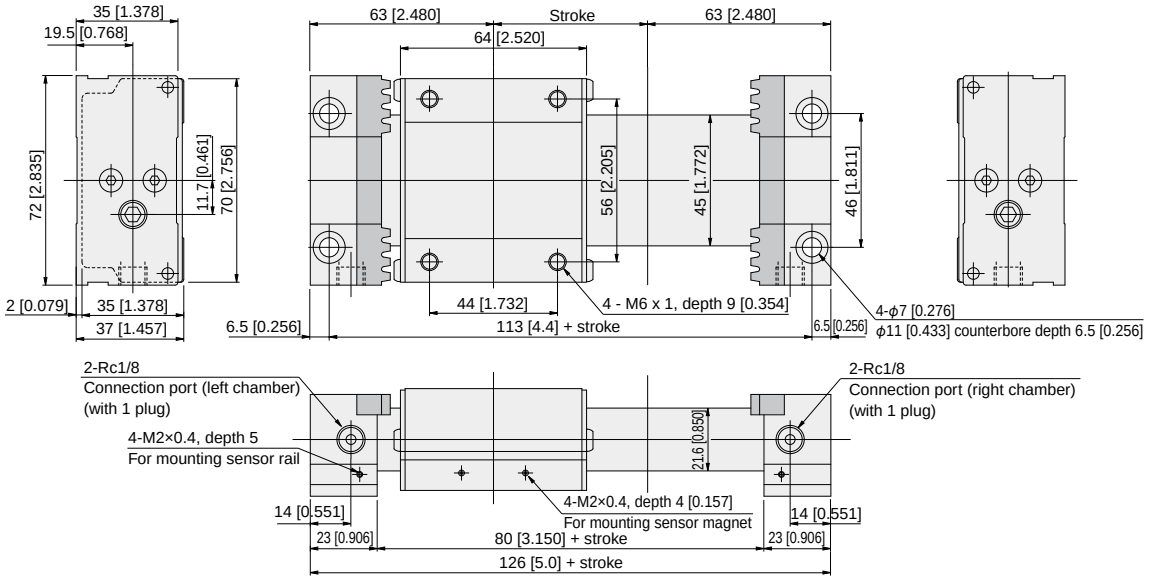

● Shock absorber specifications □**-MRVZ28**× Stroke

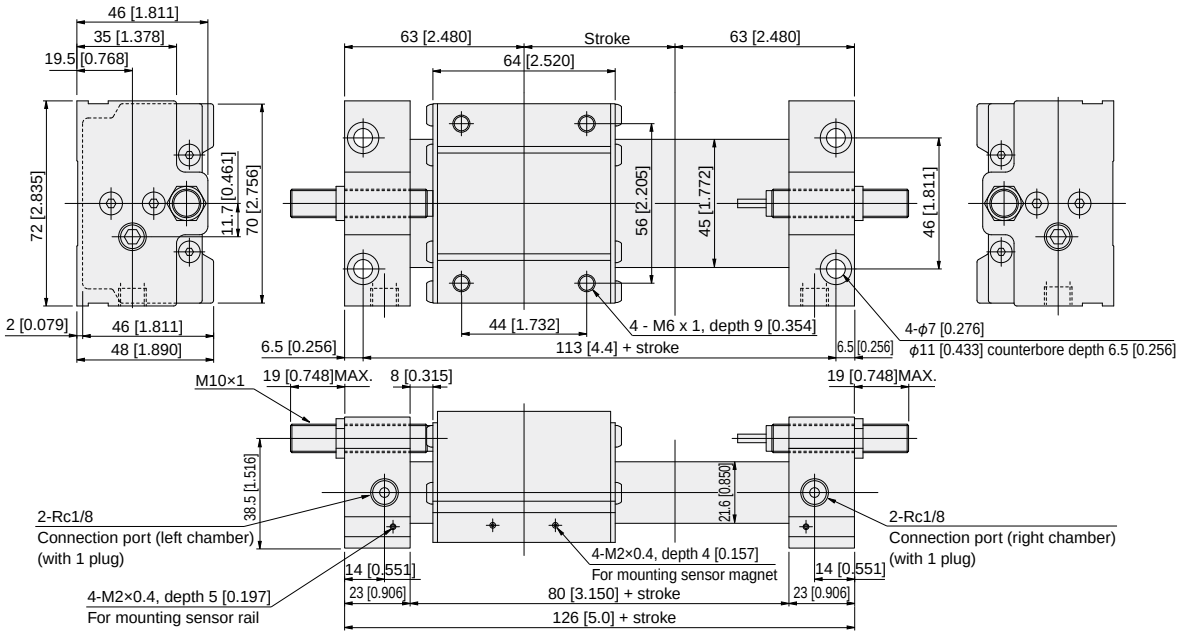

● With sensor rail □**-MRV**□**S28**× Stroke

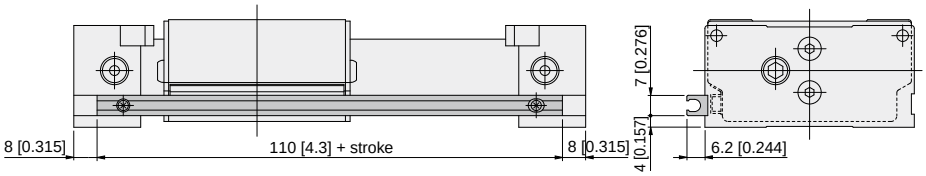

The product, equipped with a sensor rail, is shipped with the sensor magnet and sensor rail attached to the piping port side.

● **M** type mount

(not available for clean specifications)

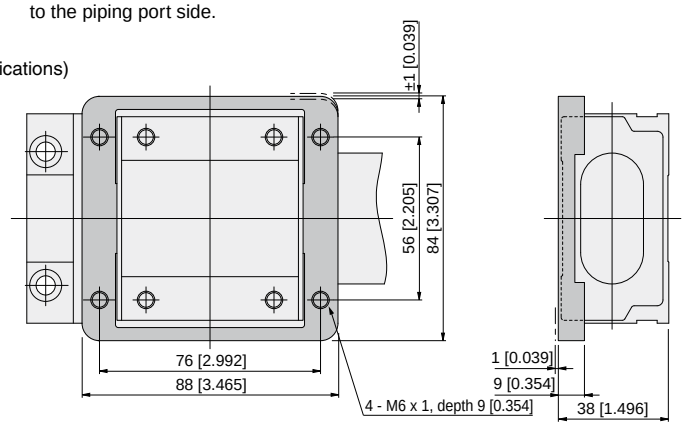

Note: Remove the plate bumper to mount and use the M type mount.

Dimensions of **MRV35 CS-MRV35** (mm [in.])

● Basic type □**-MRV35**× Stroke

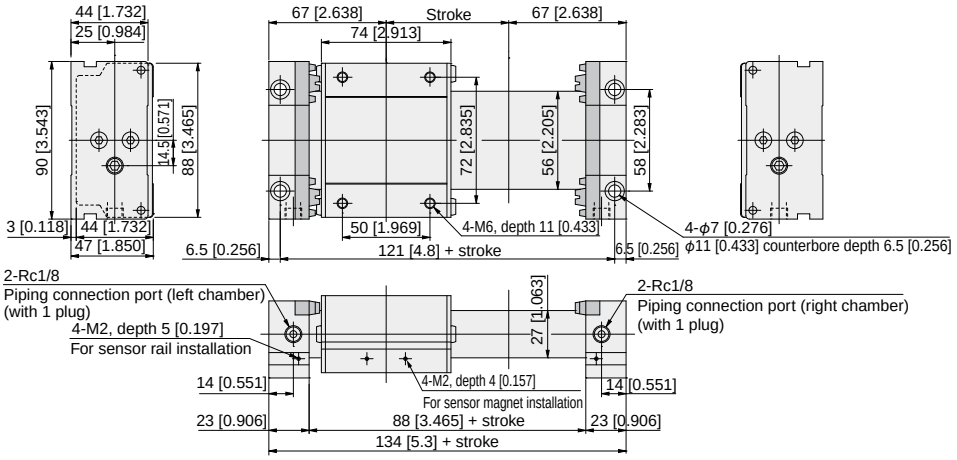

● Shock absorber specifications □**-MRVZ35**× Stroke

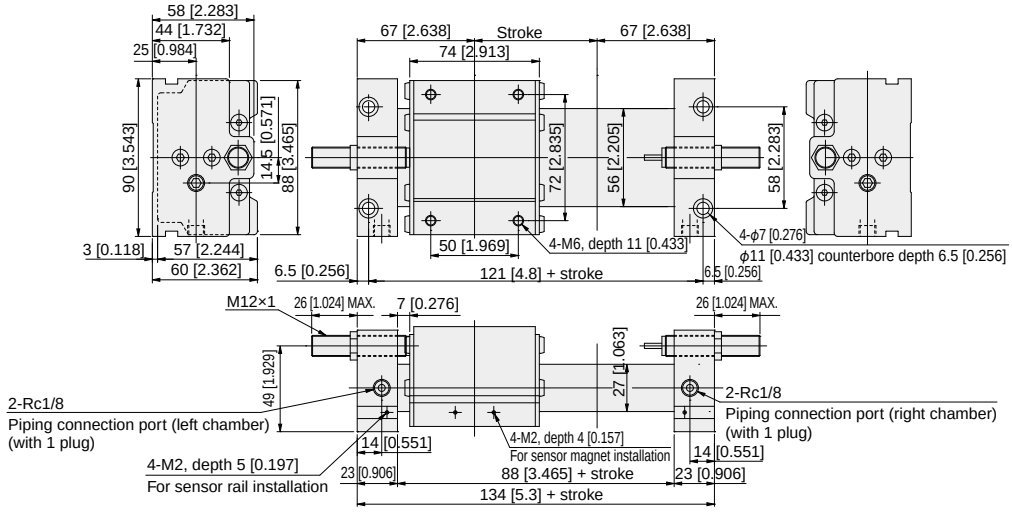

● With sensor rail □**-MRV□S35**× Stroke

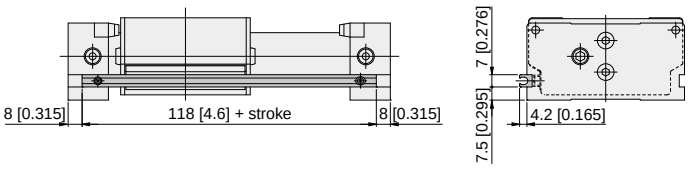

● **M** type mount
(not available for clean specifications)

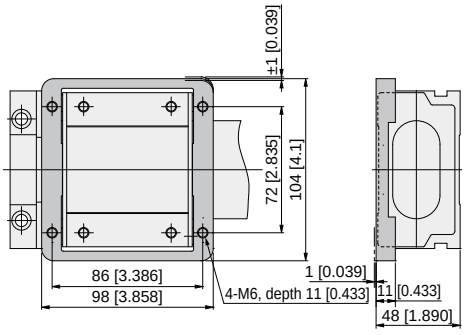

Note: Remove the plate bumper to mount and use the M type mount.

Dimensions of **MRV45 CS-MRV45** (mm [in.])

● Basic type □**-MRV45**× Stroke

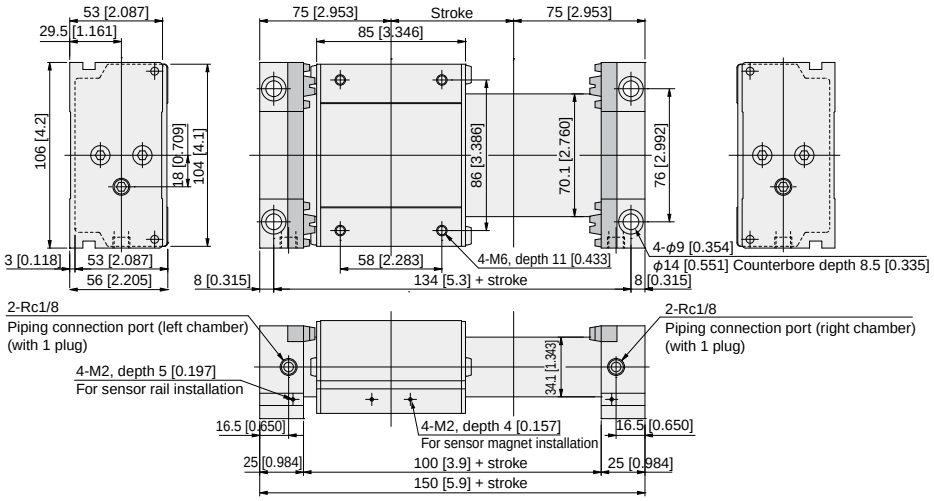

● Shock absorber specifications □**-MRVZ45**× Stroke

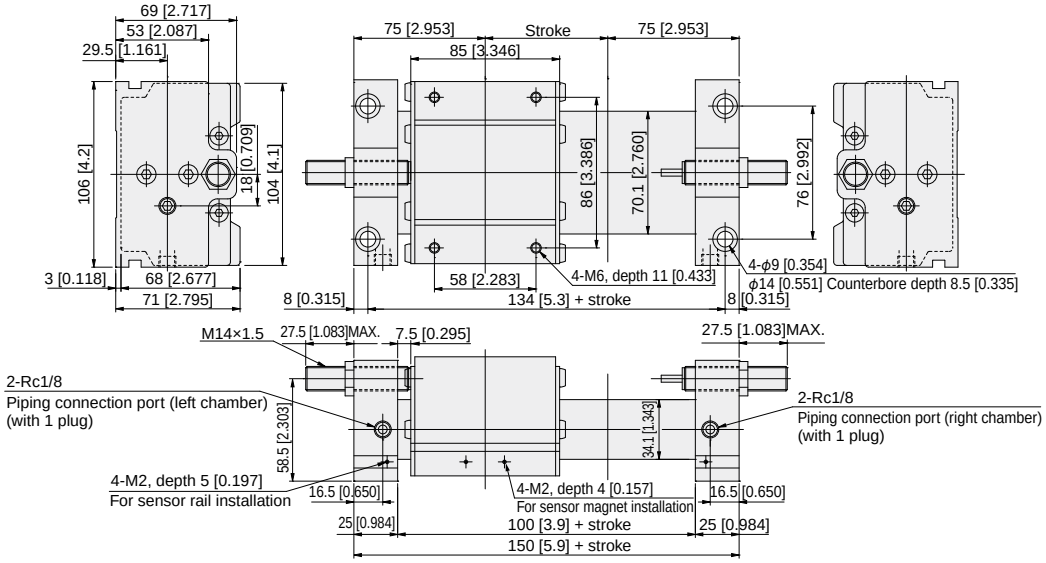

● With sensor rail □**-MRV**□**S45**× Stroke

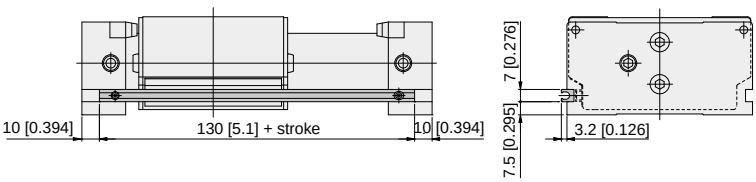

● **M** type mount
(not available for clean specifications)

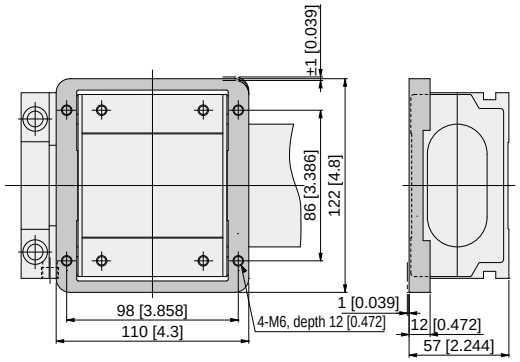

Note: Remove the plate bumper to mount and use the M type mount.

Dimensions of **MRV56 CS-MRV56** (mm [in.])

● Basic type □**-MRV56**× Stroke

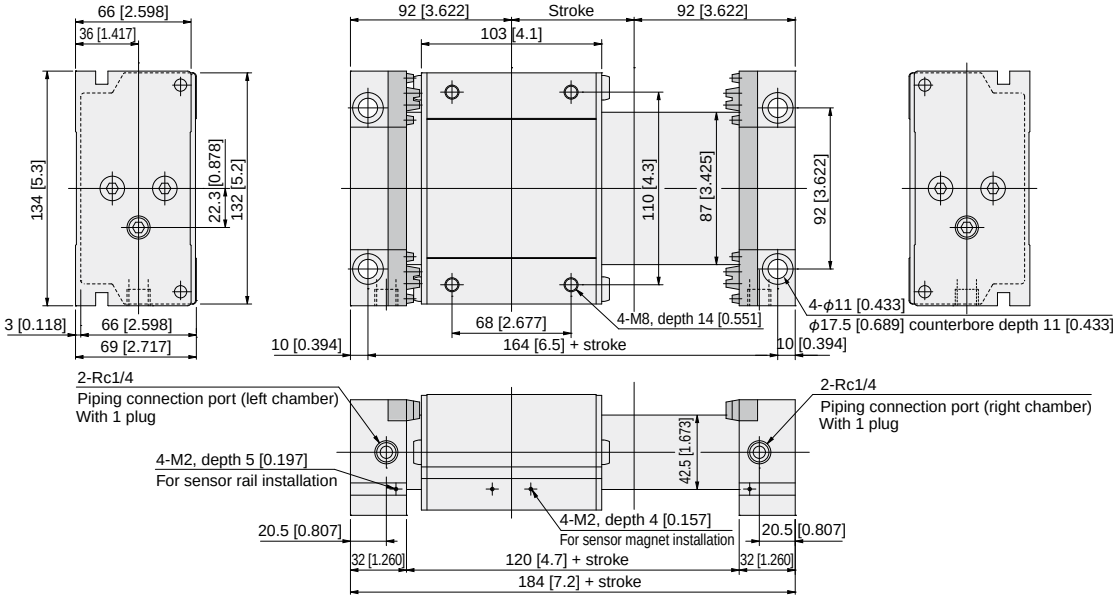

● Shock absorber specifications □**-MRVZ56**× Stroke

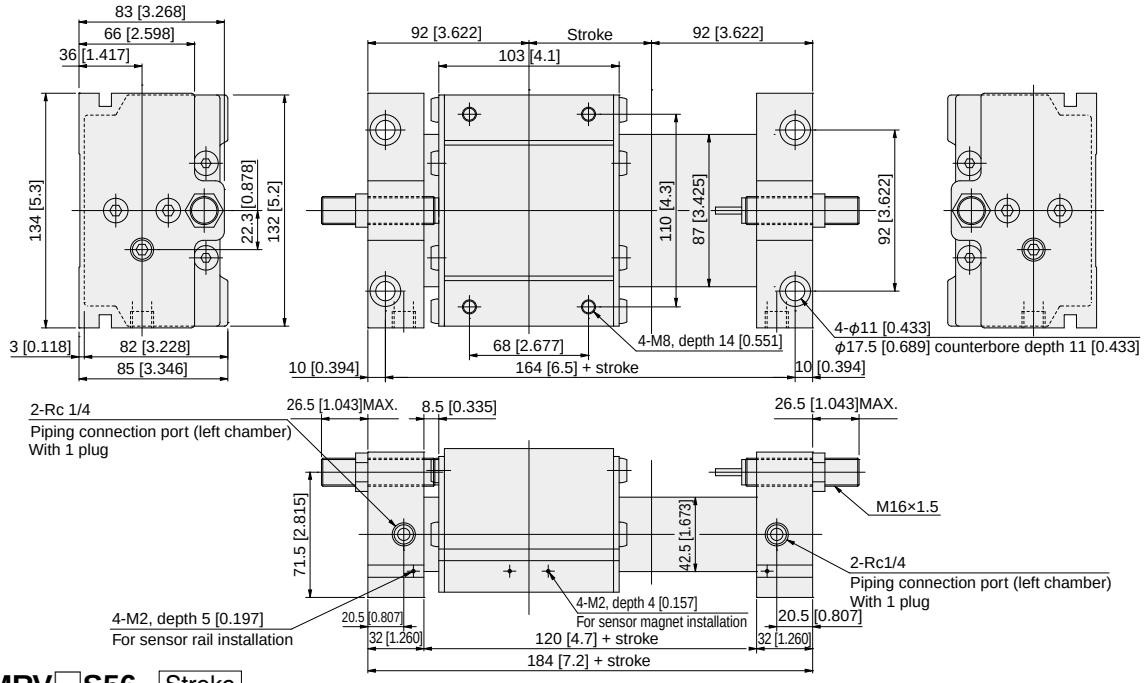

● With sensor rail □**-MRV**□**S56**× Stroke

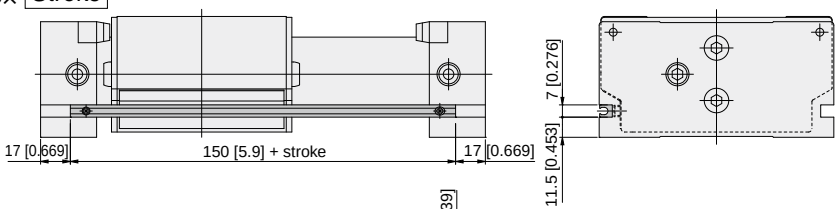

● **M** type mount

(not available for clean specifications)

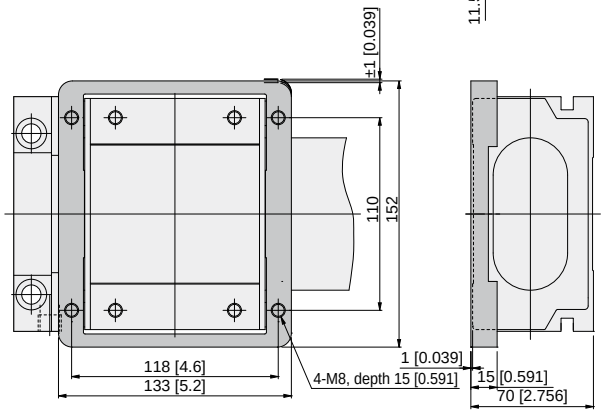

Note: Remove the plate bumper to mount and use the M type mount.

Shock absorber dimensions (mm [in.])

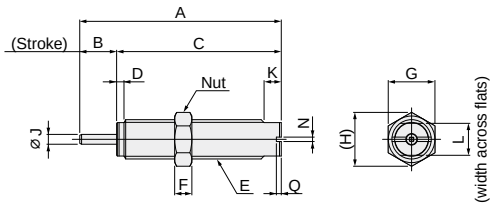

mm [in.]

Model	A	B	C	D	E	F	G	H	J	K	L	N	Q
KSHJM8×5-14 (for **MRVZ14**)	37 [1.457]	5 [0.197]	32 [1.260]	1.2 [0.047]	M8×0.75	2 [0.079]	10 [0.394]	11.5 [0.453]	2.5 [0.098]	3 [0.118]	7 [0.276]	1.3 [0.051]	1.5 [0.059]
KSHJM8×5-22 (for **MRVZ22**)													
KSHJM10×10-28 (for **MRVZ28**)	60 [2.362]	10 [0.394]	50 [1.969]	2 [0.079]	M10×1	3 [0.118]	12 [0.472]	13.9 [0.547]	3 [0.118]	5 [0.197]	8.5 [0.335]	1.3 [0.051]	1.5 [0.059]
KSHJM12×10-35 (for **MRVZ35**)	66 [2.598]	10 [0.394]	56 [2.205]	2 [0.079]	M12×1	4 [0.157]	14 [0.551]	16.2 [0.638]	3 [0.118]	5 [0.197]	10.5 [0.413]	1.3 [0.051]	1.5 [0.059]
KSHJM14×12-45 (for **MRVZ45**)	72 [2.835]	12 [0.472]	60 [2.362]	2 [0.079]	M14×1.5	5 [0.197]	17 [0.669]	19.6 [0.772]	4 [0.157]	5 [0.197]	12 [0.472]	1.3 [0.051]	1.5 [0.059]
KSHJM16×15-56 (for **MRVZ56**)	82 [3.228]	15 [0.591]	67 [2.638]	3 [0.118]	M16×1.5	7 [0.276]	19 [0.748]	21.9 [0.862]	4 [0.157]	7 [0.276]	13 [0.512]	1.8 [0.071]	2 [0.079]

About Evaluations of Cleanliness Levels

Cleanliness evaluation methods for current clean specification pneumatic equipment are not defined by JIS or other standards. Because of this, Koganei devises its own independent measurement methods for cleanliness and carries out evaluation accordingly.
The particle generation level of the clean system flat rodless cylinder is measured according to the method below.

1. Measuring Sample Products
1. CS-MRVZ28 × 500 (1.5 kg load [3.307 lb])
2. CS-MRVZ56 × 300 (1.5 kg [3.307 lb])

2. Measuring Conditions
2-1 Test circuit
Measuring area: Center of the cylinder, lower section
Measuring position: 30 mm [1.181 in] from the slider
2-2 Sample operation conditions
Operating frequency: 10 times/minute[Note]
Operating speed: CS-MRVZ28, CS-MRVZ56 } 250 mm/s [9.8 in/sec]
Applied pressure: 0.5 MPa [73 psi]
Mounting direction: Horizontal
Note: The particulate pollution level is an average of 10 repetitions measured at 10 times/minute.
The particle generation level is also the actual measured value based on the above conditions.
Your evaluations should correspond to your operating conditions when using the product.

3. Particle counter used
Make/Model ····· Rion Co., Ltd./KM-20
Suction flow ····· 28.3 ℓ/min [1.000 ft³/min]
Passable particle sizes ····· 0.1 µm, 0.2 µm, 0.3 µm, 0.5 µm, 0.7 µm, 1.0 µm

Clean room class 7 equivalent
(FED-STD Class 10000 Equivalent)

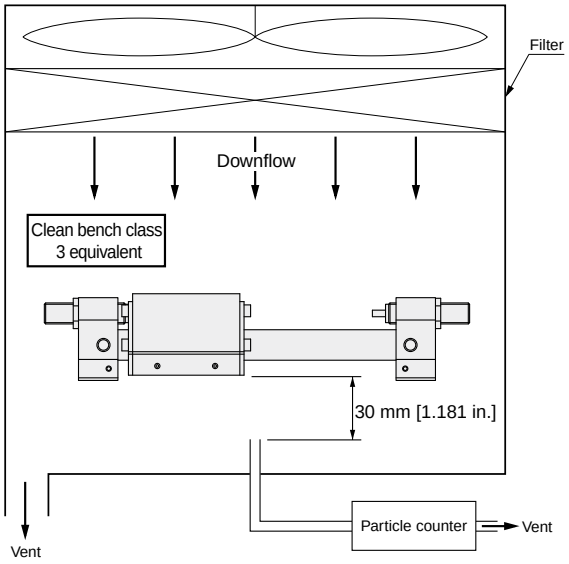

4. Measuring method
4-1 Measurement system dust emission volume check
Before measuring, measure the background for 9 minutes and verify that the particle generation of the measurement system is at zero.
4-2 Measurement
4-3 Re-confirmation
Repeat the measurement in step 4-1 and verify that the particle generation of the measurement system is at zero.

5. Measurement Results (average particle generation level of over 0.1 µm)

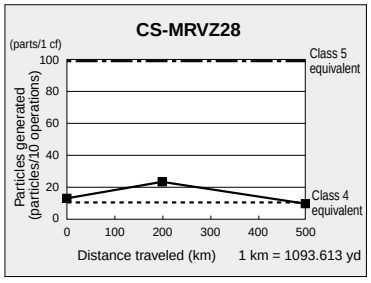

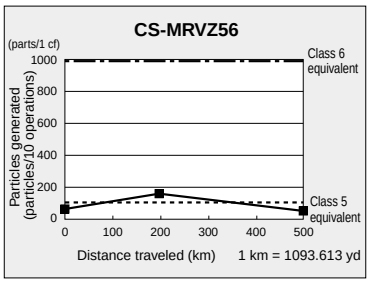

Caution: The particle generation level in the graphs above are based on measured values under conditions established at Koganei and are not guaranteed values.

SENSOR SWITCHES

Solid State Type, Reed Switch Type

Order Codes

□ - MRV

Lead wire length
A: 1000 mm [39 in.]
B: 3000 mm [118 in.]
G: 300 mm [11.8 in.] with M8 connector (only for ZE175)

Sensor switch model

ZE135: Solid state type	2-lead wire type	With indicator lamp	10 to 28 VDC	Horizontal lead wire	ZE101: Reed switch type	Without indicator lamp	5 to 28 VDC	Horizontal lead wire
ZE155: Solid state type	3-lead wire with NPN output	With indicator lamp	4.5 to 28 VDC	Horizontal lead wire			85 to 115 VAC	
ZE175: Solid state type	3-lead wire with PNP output	With indicator lamp	4.5 to 28 VDC	Horizontal lead wire	ZE102: Reed switch type	With indicator lamp	10 to 28 VDC	Horizontal lead wire
							85 to 115 VAC	

Moving Sensor Switch

Loosening the screw allows the sensor switch to be moved along the switch mounting groove of the sensor rail.

● Screw tightening torque
0.1 to 0.2 N·m [0.885 to 1.770 in·lbf]

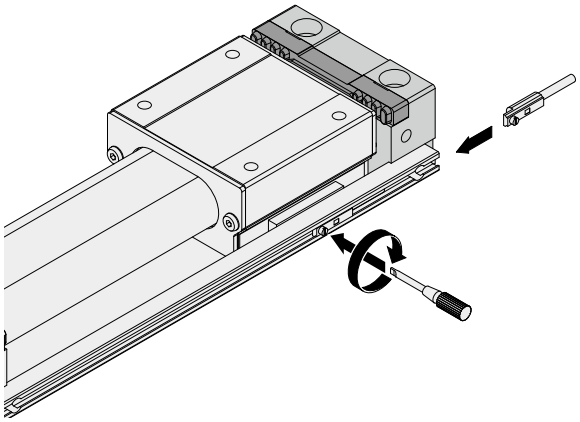

Sensor Switch Operating Range, Response Differential, and Maximum Sensing Location

● Operating range: ℓ
The distance the piston travels in one direction, while the switch is in the ON position.
● Response differential: C
The distance between the point where the piston turns the switch on and the point where the switch is turned off as the piston travels in the opposite direction.

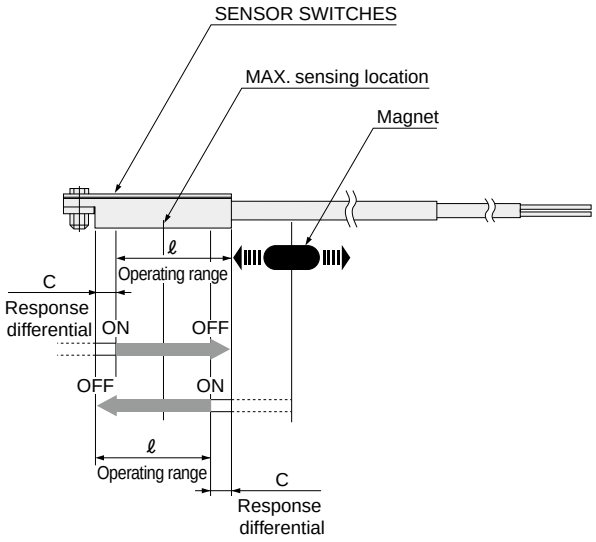

● Reed Switch Type

mm [in.]

Model	MRV14	MRV22	MRV28	MRV35	MRV45	MRV56
Operating range: ℓ	7 to 8.6 [0.276 to 0.339]	7.5 to 8.6 [0.295 to 0.339]	6.8 to 8.5 [0.268 to 0.335]	5.5 to 7.1 [0.217 to 0.280]	6.1 to 7.3 [0.240 to 0.287]	5.3 to 6.9 [0.209 to 0.272]
Response differential: C	1.2 [0.047] or less	1.2 [0.047] or less	1 [0.039] or less	0.9 [0.035] or less	0.8 [0.031] or less	1.3 [0.051] or less
MAX. sensing location*	10 [0.394]					

Remark: The above table shows reference values.
*The value from the opposite end of the lead wire.

● Solid State Type

mm [in.]

Model	MRV14	MRV22	MRV28	MRV35	MRV45	MRV56
Operating range: ℓ	2.6 to 3.5 [0.102 to 0.138]	2.8 to 3.7 [0.110 to 0.146]	2.6 to 4.0 [0.102 to 0.157]	2.6 to 3.5 [0.102 to 0.138]	3 to 3.6 [0.118 to 0.142]	2.6 to 3.1 [0.102 to 0.122]
Response differential: C	0.9 [0.035] or less	1.1 [0.043] or less	1.2 [0.047] or less	0.7 [0.028] or less	1 [0.039] or less	0.7 [0.028] or less
MAX. sensing location*	6 [0.236]					

Remark: The above table shows reference values.
*The value from the opposite end of the lead wire.

Caution: If a magnet is present under the slider, it will affect the sensor magnet and change the operating range and response differential.

Mounting the Sensor Rail and Sensor Magnet

The flat rodless cylinder has tapped holes on both sides for mounting the sensor rail and the sensor magnet. When securing bolts, tighten them at a suitable tightening torque within the allowable torque range.

Bolt	Max. tightening torque N·m [in·lbf]
M2×0.4	0.2 [1.770]

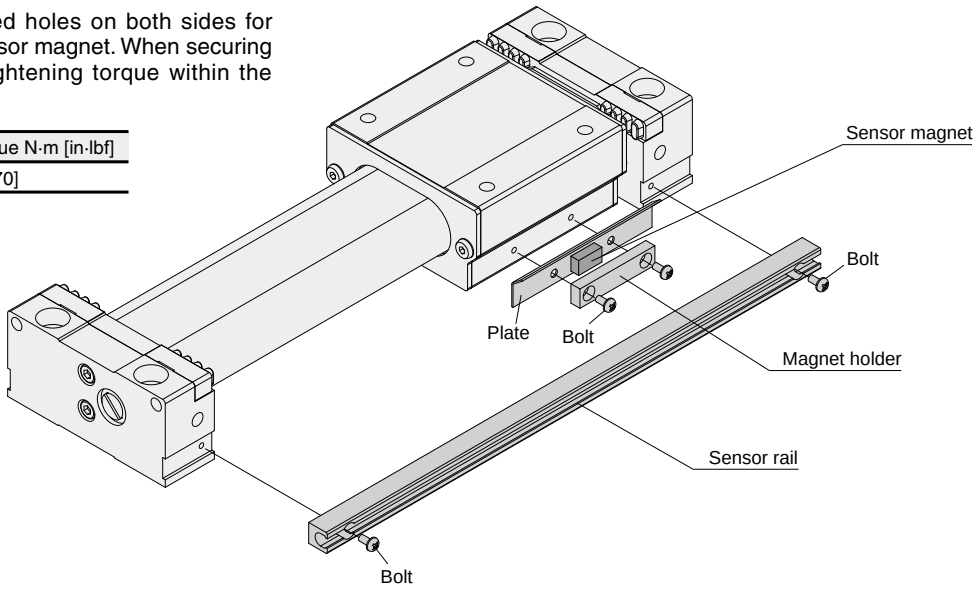

Mounting Position of the End of Stroke Detection Sensor Switch (Same for Clean Specifications and Shock Absorber Specifications)

Mounting the sensor switch in the locations shown in the diagram allows the sensor magnet to be in the position with the maximum sensitivity of the sensor switch, at the end of the stroke.

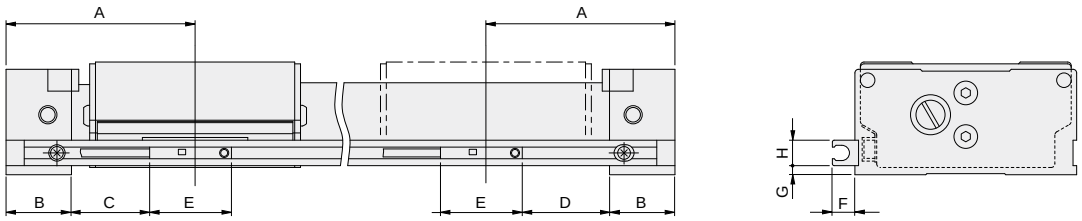

● Reed switch type (**ZE101□, ZE102□**)

mm [in.]

Equivalent cylinder diameter	A	B	C	D	E	F	G	H
14 [0.551]	41 [1.614]	15 [0.591]	13.5 [0.531]	16 [0.630]	22.5 [0.886]	6.7 [0.264]	1 [0.039]	7 [0.276]
22 [0.866]	52 [2.047]	18 [0.709]	21.5 [0.846]	24 [0.945]		6.2 [0.244]	2.5 [0.098]	
28 [1.102]	63 [2.480]	23 [0.906]	27.5 [1.083]	30 [1.181]			4 [0.157]	
35 [1.378]	67 [2.638]	23 [0.906]	31.5 [1.240]	34 [1.339]		4.2 [0.165]	7.5 [0.295]	
45 [1.772]	75 [2.953]	25 [0.984]	37.5 [1.476]	40 [1.575]		3.2 [0.126]		
56 [2.205]	92 [3.622]	32 [1.260]	47.5 [1.870]	50 [1.969]		0	11.5 [0.453]	

● Solid state type **(ZE135□, ZE155□. ZE175□)**

mm [in.]

Equivalent cylinder diameter	A	B	C	D	E	F	G	H
14 [0.551]	41 [1.614]	15 [0.591]	16.5 [0.650]	20 [0.787]	15.5 [0.610]	6.7 [0.264]	1 [0.039]	7 [0.276]
22 [0.866]	52 [2.047]	18 [0.709]	24.5 [0.965]	28 [1.102]		6.2 [0.244]	2.5 [0.098]	
28 [1.102]	63 [2.480]	23 [0.906]	30.5 [1.201]	34 [1.339]			4 [0.157]	
35 [1.378]	67 [2.638]	23 [0.906]	34.5 [1.358]	38 [1.496]		4.2 [0.165]	7.5 [0.295]	
45 [1.772]	75 [2.953]	25 [0.984]	40.5 [1.594]	44 [1.732]		3.2 [0.126]		
56 [2.205]	92 [3.622]	32 [1.260]	50.5 [1.988]	54 [2.126]		0	11.5 [0.453]	

When Mounting the Cylinders with Sensor Switches in Close Proximity (Same for Clean Specifications and Shock Absorber Specifications)

When using flat rodless cylinders in close proximity, do not mount them closer to each other than the values shown in the following tables.

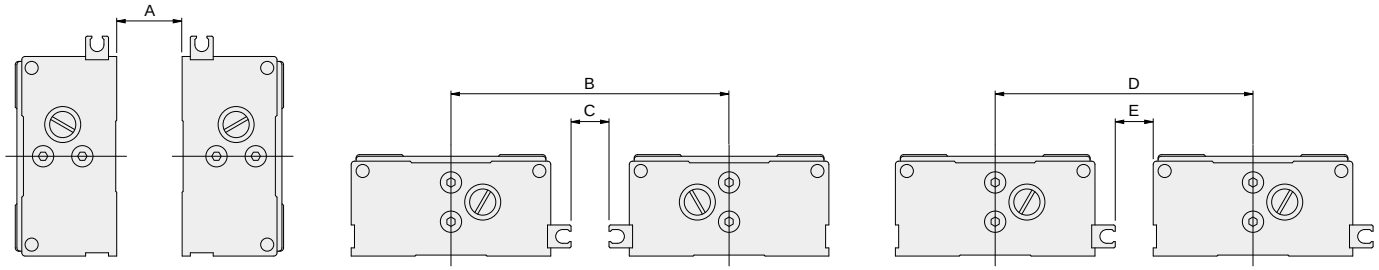

● Reed Switch Type

mm [in.]

Equivalent cylinder diameter	A	B	C	D	E
14 [0.551]	0	61.4 [2.417]	0	54.2 [2.134]	0
22 [0.866]	0	73.4 [2.890]	0	67.2 [2.646]	0
28 [1.102]	0	84.4 [3.323]	0	78.2 [3.079]	0
35 [1.378]	0	98.4 [3.874]	0	94.2 [3.709]	0
45 [1.772]	0	112.4 [4.4]	0	109.2 [4.3]	0
56 [2.205]	0	134 [5.3]	0	134 [5.3]	0

● Solid State Type

mm [in.]

Equivalent cylinder diameter	A	B	C	D	E
14 [0.551]	3 [0.118]	63.4 [2.496]	2 [0.079]	56.2 [2.213]	2 [0.079]
22 [0.866]	0	76.4 [3.008]	3 [0.118]	69.2 [2.724]	2 [0.079]
28 [1.102]	0	87.4 [3.441]	3 [0.118]	84.2 [3.315]	6 [0.236]
35 [1.378]	0	100.4 [4.0]	2 [0.079]	96.2 [3.787]	2 [0.079]
45 [1.772]	0	114.4 [4.5]	2 [0.079]	109.2 [4.3]	0
56 [2.205]	0	134 [5.3]	0	134 [5.3]	0

Limited Warranty

KOGANEI CORP. warrants its products to be free from defects in material and workmanship subject to the following provisions.

Warranty Period The warranty period is 180 days from the date of delivery.

Koganei Responsibility If a defect in material or workmanship is found during the warranty period, KOGANEI CORP. will replace any part proved defective under normal use free of charge and will provide the service necessary to replace such a part.

Limitations

- This warranty is in lieu of all other warranties, expressed or implied, and is limited to the original cost of the product and shall not include any transportation fee, the cost of installation or any liability for direct, indirect or consequential damage or delay resulting from the defects.
- KOGANEI CORP. shall in no way be liable or responsible for injuries or damage to persons or property arising out of the use or operation of the manufacturer's product.
- This warranty shall be void if the engineered safety devices are removed, made inoperative or not periodically checked for proper functioning.
- Any operation beyond the rated capacity, any improper use or application, or any improper installation of the product, or any substitution upon it with parts not furnished or approved by KOGANEI CORP., shall void this warranty.
- This warranty covers only such items supplied by KOGANEI CORP. The products of other manufacturers are covered only by such warranties made by those original manufacturers, even though such items may have been included as the components.

The specifications are subject to change without notice.

URL http://www.koganei.co.jp

E-mail: overseas@koganei.co.jp

KOGANEI CORPORATION

OVERSEAS DEPARTMENT
3-11-28, Midori-cho, Koganei City, Tokyo 184-8533, Japan
Tel: 81-42-383-7271 Fax: 81-42-383-7276

KOGANEI International America, Inc.
48860 Milmont Drive, Suite 108C Fremont, CA 94538, U.S.A
TEL: (+1)510-744-1626 FAX: (+1)510-744-1676

SHANGHAI KOGANEI INTERNATIONAL TRADING CORPORATION
RM2606-2607, Tongda Venture Building NO.1 Lane 600, Tianshan Road, Shanghai, China
TEL: (+86)021-6145-7313 FAX: (+86)021-6145-7323

TAIWAN KOGANEI TRADING CO., LTD
Rm.2,16F.,No88,Sec.2,zhongxiao E.Rd.,ZhongZheng Dist.,Taipei City10050,Taiwan(ROC)
TEL: (+886)02-2393-2717 FAX: (+886)02-2393-2719

KOGANEI KOREA CO., LTD
A-3001, Heungdeok IT Valley Bldg., Heungkeok 1-ro, 13, Giheung-gu, Yongin-si, Gyeonggi-do, 446-908, KOREA
TEL: (+82)31-246-0414 FAX: (+82)31-246-0415

KOGANEI(THAILAND) CO., LTD
555 Rasa TowerⅠ, Unit1207,1202, 12th floor, Phaholyothin Road, Chatuchak, Chatuchak, Bangkok 10900 Thailand
TEL: (+66)02-513-1228 FAX: (+66)02-513-1232

KOGANEI ASIA PTE. LTD.
69 Ubi Road 1, #05-18 Oxley Bizhub Singapore 408731
TEL: (+65)6293-4512 FAX: (+65)6293-4513

8/'19 AB
©KOGANEI CORP. PRINTED IN JAPAN