KOGANEI

Catalog No.BK-C0045

NEW Products

http://www.koganei.co.jp

RoHS compliant product

Compliance Light

In addition to automatically aligning errors with the position of workpiece insertion, Compliance Light can be used for press fitting processes.

Compliance Light
CPL70F (parallel type)

Mounting plate

Flat type air hand
AFDPG-8

* Please purchase the installation plate separately.

- **Improves process during workpiece insertion and press fitting**
- **Lightweight and compact**
- **2 types: Parallel and swing**
- **High rigidity and withstand load capacity**
  The parallel type can be used as a press fitting base
- **4 size variations**
  □34 mm [1.339 in.], □54 mm [2.126 in.],
  □70 mm [2.756 in.], □90 mm [3.543 in.]

NEW **Greater retaining force supports high-speed conveyance by robots**

NEW **Increased variations!**

Specifications of the improved retaining force

- More than double the retaining force compared to standard specifications
  Perfect for high-speed conveyance

CPLH90F

Clean system specification

- Class 5 equivalent cleanliness

CS-CPL90F

Compliance Light

Swing type

Range of movement: X, Y, Z, θ, and α

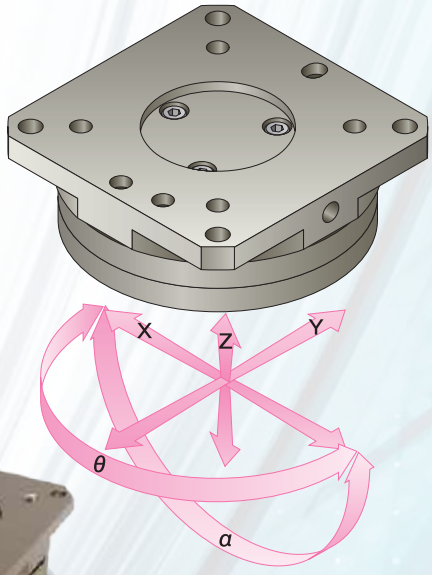

The swing type corrects positional errors when inserting workpieces and press fitting, and when handling workpieces in the X, Y, Z, θ, and α axes.

- Perfect for automatically aligning error with the workpiece insertion
- Perfect for robot hands due to its lightweight design
- Swing type with a range of movement of X, Y, Z, θ, and α
- No centripetal force can be selected for all variations (Option: -N)

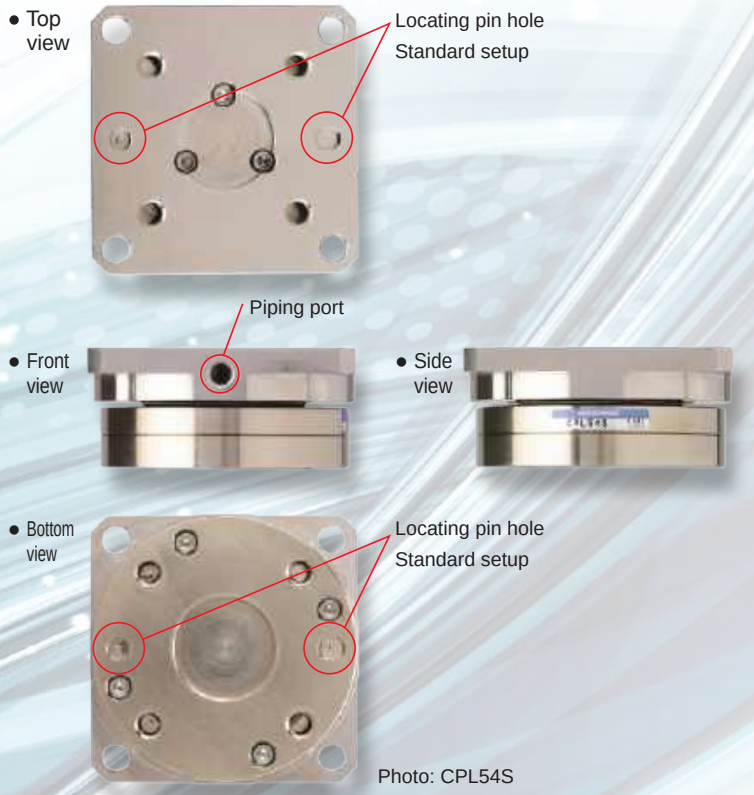

Photo: CPL54S

Explanation of operation

- When applying air pressure

Steel balls for positioning are pressed by the internal piston so that the unit and plate maintain a centered position.

- When not applying air pressure (if with centripetal force)

The centripetal force of the restraining rings in the unit and plate maintain the center by acting in the directions of the X, Y, θ, and α axes. The direction of the Z axis operates as a buffer via springs.

Glossary

Centripetal force: For Compliance Light, the restraining rings provide a force of 3 to 5 N [0.674 to 1.124 lbf.] (when movement is 0.5 mm [0.02 in.]) that acts to maintain the center.
This force is called "centripetal force".

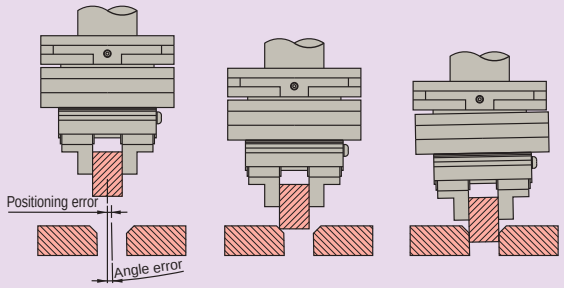

■ Variations

	Size	□34mm	□54mm	□70mm	□90mm
Standard specifications CPL□S		○	○	○	○
NEW Specifications of the improved retaining force CPLH□S		●	●	●	●
NEW Clean system specifications CS-CPL□S		●	●	●	●

CAUTION Read the safety precautions on page 5 before using this product.

Standard specifications CPL□S Swing type

Page 20→

P=0.5MPa	CPL34S	CPL54S	CPL70S	CPL90S
•Retaining force while applying air pressure	7 N	20 N	38 N	60 N
•Maximum load capacity	1kg	2kg	4kg	6kg
•Size variations	□34mm	□54mm	□70mm	□90mm

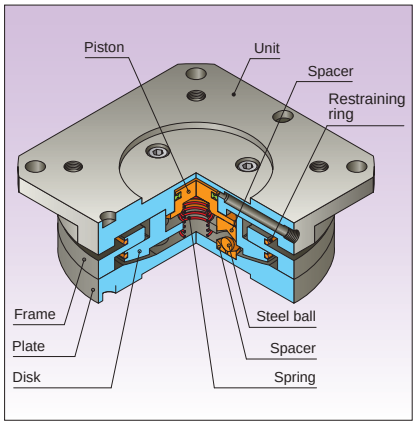

* Retaining force, according to Koganei measuring methods (reference value)

NEW Specifications of the improved retaining force CPLH□S Swing type

Page 23→

- More than double the retaining force when applying air pressure compared to standard specifications
- Perfect for the high-speed conveyance by robots due to greater retaining force

P=0.5MPa	CPLH34S	CPLH54S	CPLH70S	CPLH90S
•Retaining force while applying air pressure	24 N	64 N	115 N	145 N
•Maximum load capacity	1kg	2kg	4kg	6kg
•Size variations	□34mm	□54mm	□70mm	□90mm

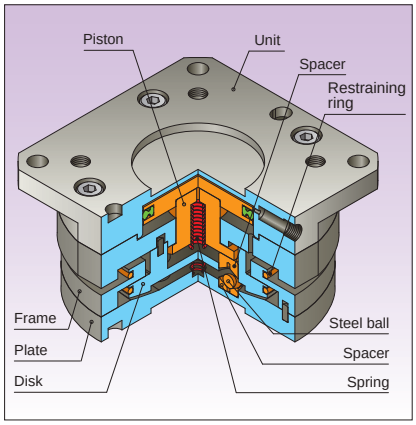

* Retaining force, according to Koganei measuring methods (reference value)

NEW Clean system specifications CS-CPL□S Swing type

Page 26→

- Just add a dust collection port and use clean grease to be perfect for use in clean rooms!
- Class 5 equivalent cleanliness (FED-STD Class 100 equivalent)

P=0.5MPa	CS-CPL34S	CS-CPL54S	CS-CPL70S	CS-CPL90S
•Retaining force while applying air pressure	7 N	20 N	38 N	60 N
•Maximum load capacity	1kg	2kg	4kg	6kg
•Size variations	□34mm	□54mm	□70mm	□90mm

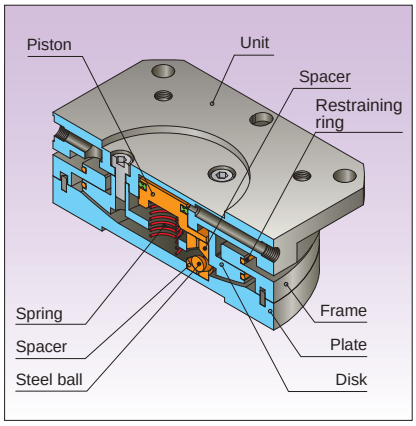

* Retaining force, according to Koganei measuring methods (reference value)

Safety Precautions (Air Cylinders and General Actuators)

Always read these precautions carefully before use.

Before selecting and using the product, please read all the Safety Precautions carefully to ensure proper product use.
The Safety Precautions shown below are to help you use the product safely and correctly, and to prevent injury or damage to you, other people, and assets beforehand.
Follow the Safety Precautions for: ISO4414 (Pneumatic fluid power—Recommendations for the application of equipment to transmission and control systems), JIS B 8370 (Pneumatic system regulations)

The directions are ranked according to degree of potential danger or damage:"DANGER!,"WARNING!,"CAUTION!," and "ATTENTION!"

⚠ DANGER	Expresses situations that can be clearly predicted as dangerous. If the noted danger is not avoided, it could result in death or serious injury. It could also result in damage or destruction of assets.
⚠ WARNING	Expresses situations that, while not immediately dangerous, could become dangerous. If the noted danger is not avoided, it could result in death or serious injury. It could also result in damage or destruction of assets.
⚠ CAUTION	Expresses situations that, while not immediately dangerous, could become dangerous. If the noted danger is not avoided, it could result in light or semi-serious injury. It could also result in damage or destruction of assets.
⚠ ATTENTION	While there is little chance of injury, this content refers to points that should be observed for appropriate use of the product.

■This product was designed and manufactured as parts for use in General Industrial Machinery.

■ In the selection and handling of the equipment, the system designer or other person with fully adequate knowledge and experience should always read the Safety Precautions, Catalog, Owner's Manual and other literature before commencing operation. Making mistakes in handling is dangerous.
■ After reading the Owner's Manual, Catalog, etc., always place them where they can be easily available for reference to users of this product.
■ If transferring or lending the product to another person, always attach the Ownerr's Manual, Catalog, etc., to the product where they are easily visible, to ensure that the new user can use the product safely and properly.
■ The danger, warning, and caution items listed under these "Safety Precautions" do not cover all possible cases. Read the Catalog and Owner's Manual carefully, and always keep safety first.

⚠ DANGER

- Do not use the product for the purposes listed below:
  1. Medical equipment related to maintenance or management of human lives or bodies.
  2. Mechanical devices or equipment designed for the purpose of moving or transporting people.
  3. Critical safety components in mechanical devices.

  This product has not been planned or designed for purposes that require advanced stages of safety. It could cause injury to human life.
- Do not use the product in locations with or near dangerous substances such as flammable or ignitable substances. This product is not explosion-proof. It could ignite or burst into flames.
- When mounting the product and workpiece, always firmly support and secure them in place. Dropping or falling the product or improper operation could result in injury.
- Never attempt to remodel the product. It could result in abnormal operation leading to injury.
- Never attempt inappropriate disassembly, or assembly of the product relating to its basic inner construction, or to its performance or functions. It could result in injury.
- Do not splash water on the product. Spraying it with water, washing it, or using it underwater could result in malfunction of the product leading to injury.
- While the product is in operation, avoid touching it with your hands or otherwise approaching too close. In addition, do not make any adjustments to the interior or to the attached mechanisms (disconnection of piping tubes).
  The actuator can move suddenly, possibly resulting in injury.

⚠ WARNING

- Do not use the product in excess of its specification range. Such use could result in product breakdowns, functions to stop, and damage. or drastically reduce the operating life.
- Before supplying air to the product and before starting operation, always conduct a safety check of the area of machine operation. Unintentional supply of air or electricity could possibly result in injury caused by contact with moving parts.
- Always check the catalog and other reference materials for correct product piping. Improper piping creates the risk of damage to and abnormal operation of the actuator.
- Do not throw the product into fire.
  The product could explode and/or release toxic gases.
- Do not sit on the product, place your foot on it, or place other objects on it.
  Accidents such as falling could result in injury. Dropping or toppling the product may result in injury, or it might also damage or break it, resulting in abnormal or erratic operation, runaway, etc.
- When conducting any kind of operation for the product, such as maintenance, inspection, repair, or replacement, always turn off the air supply completely and confirm that residual pressure inside the product or in piping connected to the product is zero before proceeding.
  In particular, be aware that residual air will still be in the air compressor or air storage tank. The actuator could abruptly move if residual air pressure remains inside the piping, causing injury.
- Do not use the actuator for equipment whose purpose is absorbing the shocks and vibrations of mechanical devices. It could break and possibly result in injury or in damage to mechanical devices.
- Use within the maximum load capacity. Using the product beyond the maximum load capacity may damage equipment or cause personal injury.
- Use safety circuits or system designs to prevent damage to machinery or injury to personnel when the machine is shut down due to emergency stop or electrical power failure.
- In initial operations after the equipment has been idle for 48 hours or more, or has been in storage, there is a possibility that contacting parts may stick, resulting in equipment operation delays or sudden movements. For these initial operations, always run a test operation before use to check that operating performance is normal.
- Do not use the product near the ocean, in direct sunlight, near mercury vapor lamps, or near equipment that generates ozone. Deterioration of rubber parts caused by ozone may reduce performance and functions or stop functions.
- Because Koganei products may be used under a wide variety of conditions, decisions concerning conformance with a particular system should be made upon the careful evaluation by the person in charge of system design. Assurances concerning expected system performance and safety are the responsibility of the designer who decides system conformity. Be sure to use the latest catalogs and technical materials to study and evaluate specification details, to consider the possibility of machine breakdown, and to configure a system that ensures fail-safe safety and reliability.

- Do not use the product in locations subject to direct sunlight (ultraviolet radiation), in locations with dust, salt, or iron particles, or in locations with media and/or ambient atmosphere that include organic solvents, phosphate ester type hydraulic oil, sulfur dioxide gas, chlorine gas, acids, etc. Such uses could lead to loss of functions within a short period, sudden degradation in performance, or reduced operating life. For details on materials used in the product, refer to the description of materials used in major parts.

⚠ CAUTION

- When installing the product, leave room for adequate working space around it. Failure to ensure adequate working space will make it more difficult to conduct daily inspections or maintenance, which could eventually lead to system shutdown or damage to the product.
- Do not scratch, dent, or deform the actuator by climbing on the product, using it as a scaffold, or placing objects on top of it. It could result in damaged or broken a product that results in operation shutdown or degraded performance.
- Always post an“operations in progress”sign for installations, adjustments, or other operations, to avoid unintentional supplying of air, electrical power, etc. Such accidental supplies may cause electric shock or sudden activation of the product that could result in physical injury.
- Using extremely dry air with a dew point lower than -20°C [-4°C], may affect the quality of the lubricating oil used. This creates the risk of degraded performance, loss of function, or other problems.

⚠ ATTENTION

- When considering the possibility of using this product in situations or environments not specifically noted in the Catalog or Owner’s Manual, or in applications where safety is an important requirement such as in an airplane facility, combustion equipment, leisure equipment, safety equipment, and other places where human life or assets may be greatly affected, take adequate safety precautions such as an application with enough margins for ratings and performance or failsafe measure.
  Be sure to consult us about such applications.
- Use a protective cover, etc., to ensure that human bodies do not come into direct contact with the operating portion of mechanical devices, etc.
- Do not control in a way that would cause workpieces to fall during power failure.
  Take control measures so that they prevent the workpieces, etc., from falling during power failure or emergency stop of the mechanical devices.
- When handling the product, wear protective gloves, safety glasses, safety shoes, etc., to keep safety.
- When the product can no longer be used, or is no longer necessary, dispose of it appropriately as industrial waste.
- Pneumatic equipment can exhibit degraded performance and function over its operating life. Always conduct daily inspections of the pneumatic equipment, and confirm that all requisite system functions are satisfied, to prevent accidents from happening.
- For inquiries about the product, contact your nearest Koganei sales office or Koganei overseas department. The address and telephone number is shown on the back cover of this catalog.

⚠ OTHERS

- Always observe the following items.
  1. When using this product in pneumatic systems, always use genuine KOGANEI parts or compatible parts (recommended parts).
     When conducting maintenance and repairs, always use genuine KOGANEI parts or compatible parts (recommended parts).
     Always observe the required methods.
  2. Do not attempt inappropriate disassembly or assembly of the product relating to basic configurations, or its performance or functions.

  Koganei cannot be responsible if these items are not properly observed.

Warranty and General Disclaimer

1. Warranty Period
The warranty period for Koganei products is 1 year from the date of delivery.
*However, some products have a 2-year warranty; contact your nearest Koganei sales office or the Koganei overseas department for details.

2. Scope of Warranty and General Disclaimer

(1) When a product purchased from Koganei or from an authorized Koganei distributor or agent malfunctions during the warranty period in a way that is attributable to Koganei's responsibility, Koganei will repair or replace the product free of charge. Even if a product is still within the warranty period, its durability is determined by its operation cycles and other factors. Contact your nearest Koganei sales office or the Koganei overseas department for details.

(2) The Koganei product warranty covers individual products. Therefore, Koganei is not responsible for incidental losses (repair of this product, various expenses required for replacement, etc.) caused by breakdown, loss of function, or loss of performance of Koganei products.

(3) Koganei is not responsible for any losses or for any damages to other machinery caused by breakdown, loss of function, or loss of performance of Koganei products.

(4) Koganei is not responsible for any losses due to use or storage of the product in a way that is outside of the product specifications prescribed in Koganei catalogs and instruction manuals, and/or due to actions that violate the mounting, installation, adjustment, maintenance or other safety precautions.

(5) Koganei is not responsible for any losses caused by breakdown of the product due to factors outside the responsibility of Koganei, including but not limited to fire, natural disaster, the actions of third parties, and intentional actions or errors by the purchaser.

General precautions

Piping

Before performing piping work on the product, thoroughly flush the inside of the pipes (blow out with compressed air). Machining chips, sealing tape, rust and other debris remaining from the piping work may result in air leaks and malfunctions. The dust collection port for the clean system specifications is a counterbore connection port. When piping and mounting, make sure that the connection port for the lock is correct.

Air supply

1. Use air as the medium. For the use of any other medium, consult your nearest Koganei sales office.
2. Air used for the product should be clean air that contains no degraded compressor oil, etc. Install an air filter (filtration of 40 μm or less) near the product to remove collected liquid or dust. Also drain the air filter periodically. If liquid or dust gets into the product, it may cause defective operation.

Lubrication

1. The cylinder can be used without lubrication, however, if lubrication, such as a lubricator, is used, use turbine oil type 1 (ISO VG32) or an equivalent. Avoid using spindle oil or machine oil.
2. Never apply lubrication to the sliding parts of the swing type. Doing so may cause defective operation.
3. Do not apply lubricants in clean system specifications. Applying lubrication may cause malfunctions.

Environment

1. Cover the unit when using it in locations where it might be subject to excessive dust, dripping water, dripping oil, etc.
2. Do not use the product in environments which may be corrosive. Using the cylinder in these types of environments may result in damage or defective operation.
3. Do not use it in excessively dry conditions.
4. Do not use the cylinder if the ambient temperature is over 60°C [140°F], doing so may result in damage or defective operation. Also, consider anti-freezing measures if the temperature is less than 5°C [41°F], because moisture may freeze and result in damage or defective operation.

Handling

1. Confirm that there is no residual pressure in the product before starting maintenance work.
2. Displacement should not exceed the allowed range of movement in any direction. It could result in damaged or broken a product that results in operation shutdown or degraded performance.
3. To lock or unlock the function for error correction (compliance), switch between applying and not applying air pressure. When inserting or pushing, do so in an unlocked state with no air pressure applied. When moving, do so in a locked state with air pressure applied. Moreover, install a shock absorber, etc., where the movement comes to a standstill to ensure as smooth a stop as possible. Sudden stops may cause the lock to disengage, and reduce the centripetal accuracy.
4. Use within the range for the maximum load capacity. Using this unit while exceeding the maximum load capacity may cause wear or degradation to the sliding parts.
5. The value for the allowable load is a static load. Treat it as a temporary load in a stationary state. Ensure that there are sufficient allowances if the unit is subjected to impacts. When press fitting, use a load of 1/10 or less of the value for the allowable load.
6. The parallel type can also be used in a lower position. When using it in a lower position, use it on the center of the product and do not allow it to hang over. The mounted load should be less than the maximum load capacity.
7. The center position when pressure is applied to the plate and the center position when pressure is not applied may be misaligned.
8. Mount the product so that the center of gravity of the mounted load falls within the plate's external diameter, and do not operate with an overhanging load. Doing so may cause wear or degradation to the sliding parts.
9. For each product that does not have centripetal force (-N), the retaining force and the retaining moment are the same as the values indicated on the graph.

Installing

1. Use this unit in a horizontal position when no air pressure is applied (unlocked). The mounting surface should be flat. If the cylinder twists or bends when mounted, not only will it be inaccurate, but there may be air leaks and defective operation.
2. Note that if the product's mounting surface is scratched or dented it can adversely affect flatness.
3. Be sure that the unit and the mounting bolts are strong enough.
4. In cases where loosening of screws due to impact and/or vibration may be a factor, consider looseness prevention measures. Be careful that adhesive spreads out evenly. If the adhesive gets into the product, it may cause defective operation.
5. Be careful that error correction (compliance) is not obstructed by piping and wiring when mounting hands, etc., to the mounting surface.

Repeatability

Move the plate, with no load and no air pressure applied, in any direction and measure the position at which the plate stops after applying air. Measure this 10 times and calculate the maximum deviation. The repeatability is the value with ± appended to 1/2 of the calculated maximum deviation.

Repeatable angle accuracy

Unidirectional repeatability

Rotate the plate, with no load and no air pressure applied, in the same direction and measure the angle at which the plate stops after applying air. Measure this 10 times and calculate the maximum deviation. The repeatable angle accuracy is the value with ± appended to 1/2 of the calculated maximum deviation.

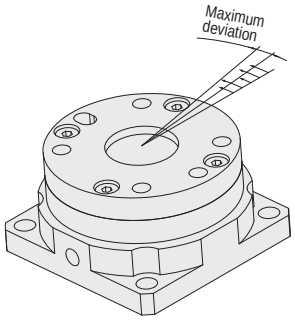

Unidirectional repeatability

Bidirectional repeatability

Rotate the plate, with no load and no air pressure applied, laterally and measure the angle at which the plate stops after applying air. Measure this 10 times and calculate the maximum deviation. The repeatable angle accuracy is the value with ± appended to 1/2 of the calculated maximum deviation.

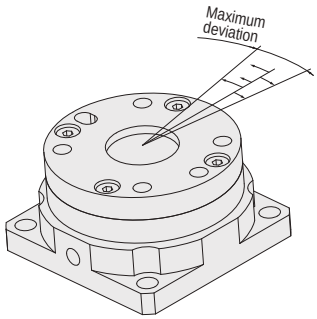

Bidirectional repeatability

Tightening torque

● Fittings

Screw size	Tightening torque **N·m [ft·lbf]**
M3×0.5	0.7 [0.516]
M5×0.8	1.0 ～ 1.5 [0.738 ～ 1.106]

● Mounting a workpiece

Standard specifications and clean system specifications

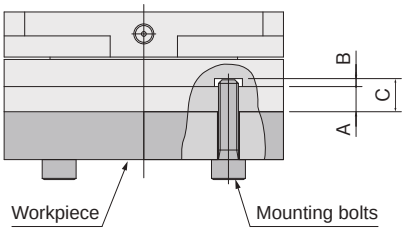

Specifications of the improved retaining force

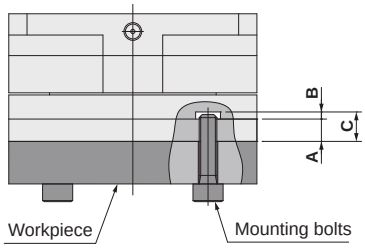

● Installing the main unit

Standard specifications and clean system specifications

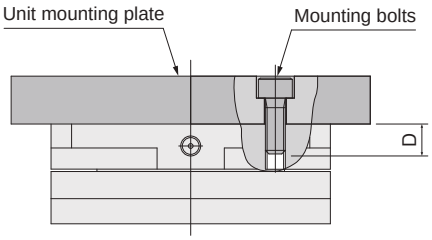

Specifications of the improved retaining force

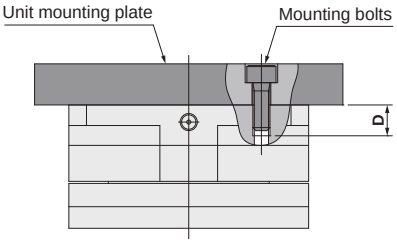

Type	Model	Bolt	Maximum tightening torque (**N·m [ft·lbf]**)	**A** (**mm [in.]**)	**B** (**mm [in.]**)	**C** (**mm [in.]**)	**D** (**mm [in.]**)
Parallel type	**CPL34F**	M3×0.5	0.63 [0.465]	4.3 [0.169]	1 [0.039]	5.3 [0.209]	6 [0.236]
	CPLH34F						
	CS-CPL34F						
	CPL54F	M5×0.8	3 [2.213]	5.2 [0.205]	1.5 [0.059]	6.7 [0.264]	7 [0.276]
	CPLH54F						10 [0.394]
	CS-CPL54F						7 [0.276]
	CPL70F	M5×0.8	3 [2.213]	6.3 [0.248]	1.5 [0.059]	7.8 [0.307]	8 [0.315]
	CPLH70F						11 [0.433]
	CS-CPL70F						8 [0.315]
	CPL90F	M6×1	5.2 [0.205]	7 [0.276]	2 [0.079]	9 [0.354]	9 [0.354]
	CPLH90F						14 [0.551]
	CS-CPL90F						9 [0.354]
Swing type	**CPL34S**	M3×0.5	0.63 [0.465]	4.8 [0.189]	1 [0.039]	5.8 [0.228]	6 [0.236]
	CPLH34S						
	CS-CPL34S						
	CPL54S	M5×0.8	3 [2.213]	6.7 [0.264]	1.5 [0.059]	8.2 [0.323]	7 [0.276]
	CPLH54S						10 [0.394]
	CS-CPL54S						7 [0.276]
	CPL70S	M5×0.8	3 [2.213]	7.8 [0.307]	1.5 [0.059]	9.3 [0.366]	8 [0.315]
	CPLH70S						11 [0.433]
	CS-CPL70S						8 [0.315]
	CPL90S	M6×1	5.2 [0.205]	9.5 [0.374]	2 [0.079]	11.5 [0.453]	9 [0.354]
	CPLH90S						14 [0.551]
	CS-CPL90S						9 [0.354]

Cleanliness Evaluation (Compliance Light)

Cleanliness evaluation methods for current clean specification pneumatic equipment are not defined by JIS or other standards.
Because of this, Koganei devises its own independent measurement methods for cleanliness and evaluates accordingly.

1. Samples being measured (with suction from the dust collection port)

Parallel type	Load
CS-CPL34F	0.4kg
CS-CPL54F	0.8kg
CS-CPL70F	1.1kg
CS-CPL90F	1.1kg

Swing type	Load
CS-CPL34S	0.4kg
CS-CPL54S	0.8kg
CS-CPL70S	1.1kg
CS-CPL90S	1.1kg

2. Measurement procedure

2-1 Checking the volume of dust emission in the measurement system

Particles are measured in the clean bench (Figure 1) for 9 minutes without operating the samples in the clean bench (background measurement).

This confirms that, under the background measurement conditions, the number of particles measures 0 (zero).

2-2 Actual measurement

The samples are operated for 36 minutes and the total value of dust emission is measured for the latter 18 minutes.

2-3 Re-confirmation

The measurements in 2-1 are done again to re-check the dust emission in the clean bench.

2-4 Measurement value conversion

The total value of dust emission measured in the latter 18 minutes of 2-2 is converted to the value per 10 operations.

3. Measurement conditions

- Operating frequency: 1 Hz (air supply to compliance light ON-OFF)
- Applied air pressure: 0.5 MPa
- Suction conditions: Micro ejector: ME05
  Primary side: 0.5 MPa air pressure applied
  Usable tubes: ϕ 6
- Particle counter used
  Suction flow: 28.3 ℓ /min (ANR) [1.000 ft 3/min (SCFM)]
  Diameter of measured particles: 0.1 μ , 0.2 μ , 0.3 μ , 0.5 μ , 0.7 μ , 1.0 μ

4. Measurement results

- Measurement results after one million sample operations
  (with suction from the dust collection port)

Parallel type: CS-CPL34F, CS-CPL54F,
CS-CPL70F, CS-CPL90F
Swing type: CS-CPL34S, CS-CPL54S
Dust emission in the products above could not be confirmed.

Swing type: Volume of dust emission for
CS-CPL70S, CS-CPL90S
The following graph shows the results.
Note: The results of dust emission in the graph are actual values measured under Koganei standards, and are not intended to be guaranteed values.

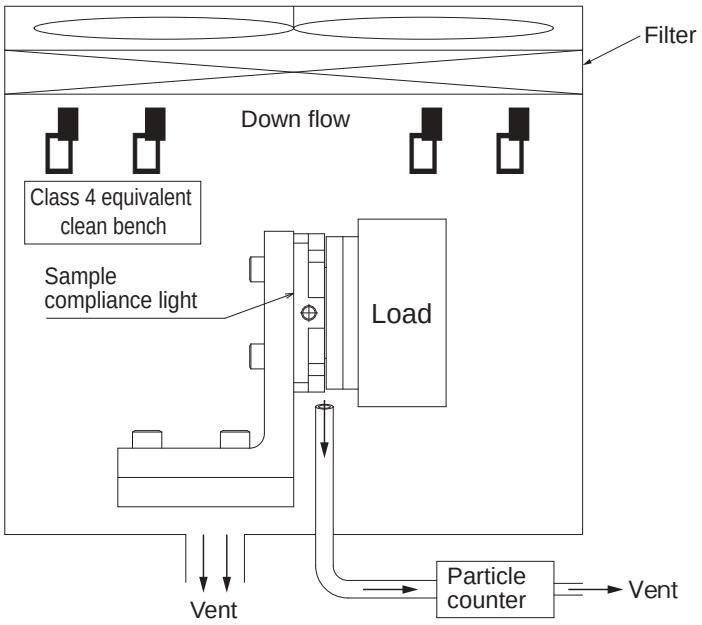

Figure 1: Outline of particle measuring device

● **CS-CPL70S**

CS-CPL70S
Dust emission of each particle size (per 10 operations)

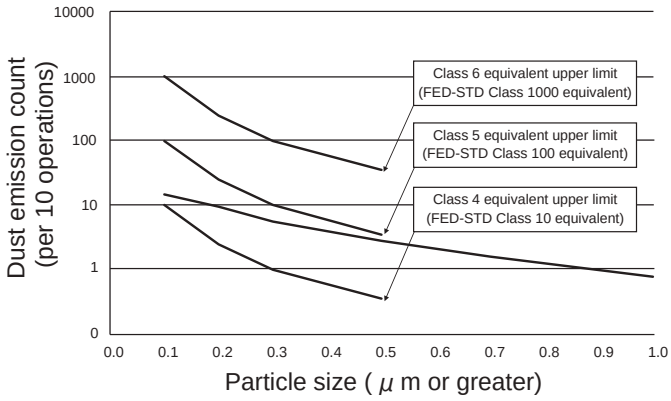

● **CS-CPL90S**

CS-CPL90S
Dust emission of each particle size (per 10 operations)

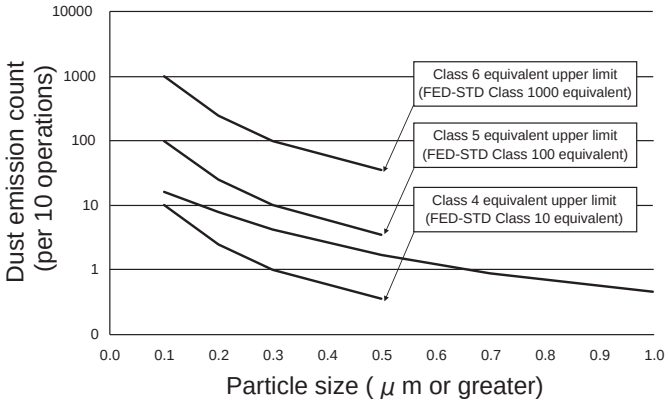

Compliance Light

Standard specifications
Swing type

Specifications

Item		Basic type	CPL34S	CPL34S-N	CPL54S	CPL54S-N	CPL70S	CPL70S-N	CPL90S	CPL90S-N
Bore size		mm [in.]	6 [0.236]		10 [0.394]		16 [0.630]		20 [0.787]	
Dimensions		mm [in.]	□34 [□1.339]		□54 [□2.126]		□70 [□2.756]		□90 [□3.543]	
Height		mm [in.]	19 [0.748]		24 [0.945]		28 [1.102]		32 [1.260]	
Mass		g [oz.]	43 [1.517]		136 [4.8]		260 [9.2]		490 [17.3]	
Operating type			Single acting type							
Media			Air							
Operating pressure range		MPa [psi.]	0.2 to 0.7 [29.000 to 101.500]							
Proof pressure		MPa [psi.]	1.05 [152.250]							
Operating temperature range		°C [°F]	0 to 60 [0 to 140.000]							
Diameter of connection port		mm [in.]	M3×0.5 [0.020]		M5×0.8 [0.031]					
Lubrication	Cylinder part		Not required							
	Sliding part		No							
Maximum load capacity		kg [lb.]	1 [2.205]		2 [4.410]		4 [8.820]		6 [13.230]	
Movement range	X − Y	mm [in.]	±0.5 [0.020]		±1 [0.039]		±1.5 [0.059]		±2 [0.079]	
	Z	mm [in.]	−0.5 [−0.020]		−0.5 [−0.02]		−0.7 [−0.028]		−1.0 [−0.039]	
	θ (twisting)	°	±3		±4					
	α (inclination) °	Swing angle	±0.5		±1					
		Incline angle	±1.4		±0.7					
Centripetal force (when movement is 0.5 mm) Note1		N [lbf.]	3 [0.674]	0 [0]	5 [1.124]	0 [0]	5 [1.124]	0 [0]	3 [0.674]	0 [0]
Repeatability Note2 (in the direction of X and Y)	P=0.5MPa	mm [in.]	±0.05 [0.002]							
Repeatable angle accuracy Note3 (in the direction of θ)	P=0.5MPa	Degrees	±0.01 [0.004] (unidirectional repeatability) ±0.3 [0.012] (bidirectional repeatability)		±0.1 [0.004] (unidirectional repeatability) ±0.2 [0.008] (bidirectional repeatability)					
Withstand load Note5	Pushing direction	N [lbf.]	1580 [355]		2840 [638]		5150 [1158]		6670 [1499]	
	Pulling direction	N [lbf.]	840 [188.8]		1480 [333]		2980 [670]		4880 [1097]	

Note 1: Centripetal force: Indicates the force, with no load and no air pressure applied, that maintains the center position via the restraining ring.
Note 2: Repeatability: The maximum deviation of the position at which the plate, with no load and no air pressure applied, stops when air has been applied after moving it in any direction. For details, see page ⑦.
Note 3: Repeatable angle accuracy: bidirectional repeatability
The maximum deviation of the angle at which the plate, with no load and no air pressure applied, stops when air has been applied after rotating laterally. For details, see page ⑦.
Note 4: The center position when air pressure is applied to the plate and the center position when air pressure is not applied may be misaligned.
Note 5: When press fitting, use a load of 1/10 or less of the value for the allowable load. For details, see page ⑦.
Note 6: Mount the product so that the center of gravity of the mounted load falls within the plate's external diameter, and do not operate with an overhanging load.
Note 7: For the Handling Instructions and Precautions, see page ⑦.

Order Codes

• Swing type

CPL □ **S** - □

Compliance Light

Size
34: □34 mm [□1.339 in.]
54: □54 mm [□2.126 in.]
70: □70 mm [□2.756 in.]
90: □90 mm [□3.543 in.]

Direction of movement
S: twisting movement

Centripetal force
Blank: with centripetal force
N : without centripetal force

Direction of movement

• X, Y, Z, θ, and α axes

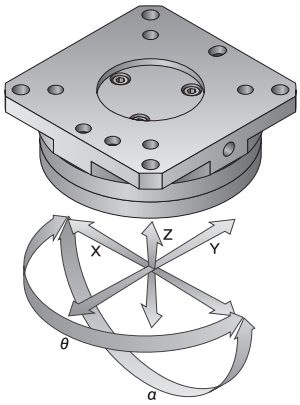

Inner construction

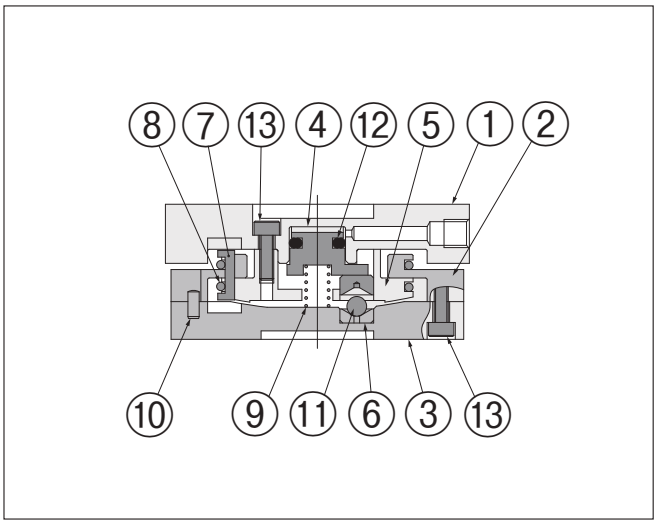

Major parts and materials

No.	Name \ Model	CPL34S	CPL54S	CPL70S	CPL90S
①	Unit	Aluminum alloy (electroless nickel plated)			
②	Frame	Aluminum alloy (electroless nickel plated)			
③	Plate	Aluminum alloy (electroless nickel plated)			
④	Piston	Aluminum alloy (anodized)			
⑤	Disk	Aluminum alloy (special anti-abrasion treated)			
⑥	Spacer	Stainless steel (heat-treated)			
⑦	Alignment pin	Stainless steel (heat-treated)			
⑧	Restraining ring	Stainless steel			
⑨	Spring	Stainless steel	Piano wire		
⑩	Parallel pin	Stainless steel			
⑪	Steel ball	Steel			
⑫	Seal	Synthetic rubber (NBR)			
⑬	Bolt	Stainless steel			

Graph (reference values)

• Centripetal force

* Centripetal force: Force that maintains the center position via the restraining ring in a condition in which no load and no air pressure is applied.

1N = 0.225 lbf.
1mm = 0.039 in.
1 MPa = 145.000 psi.

CPL34S

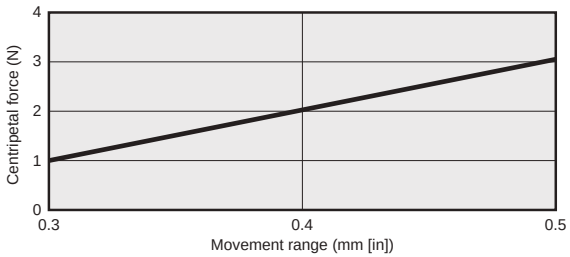

CPL54S

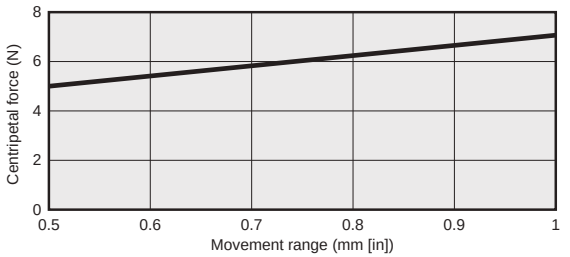

CPL70S

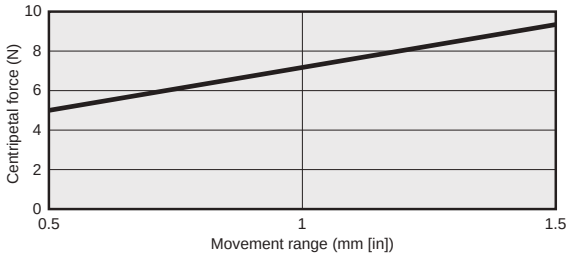

CPL90S

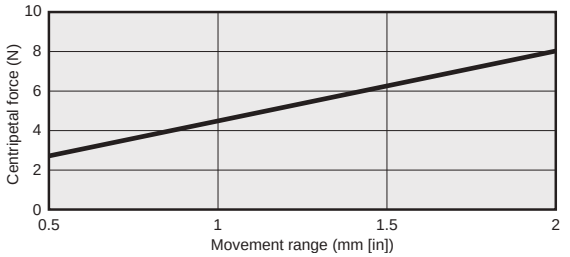

• Retaining force, Retaining moment

Retaining force
Retaining moment

* Retaining force: Force that maintains the center position of the X and Y directions when air pressure is applied
* Retaining moment: Force that maintains the center position of the θ direction when air pressure is applied

CPL34S

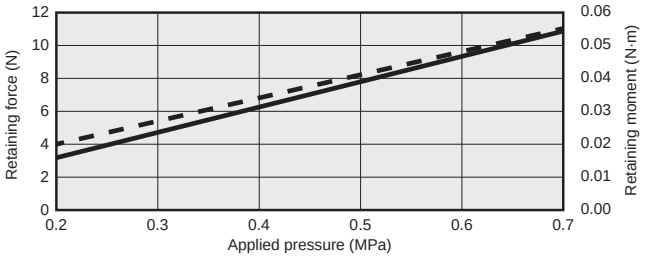

CPL54S

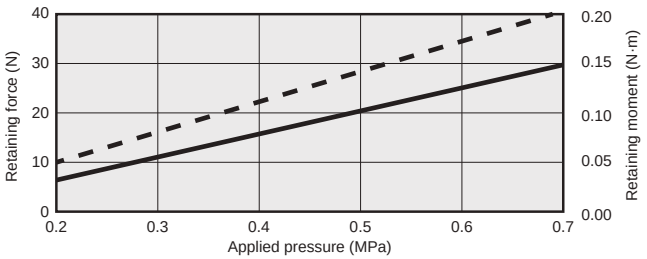

CPL70S

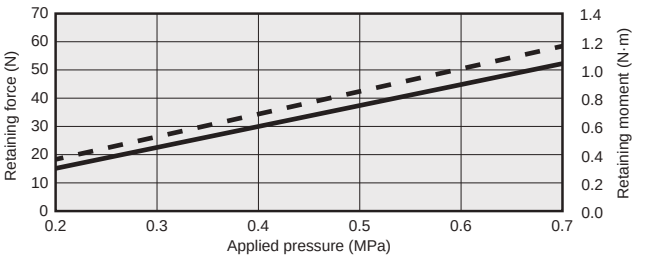

CPL90S

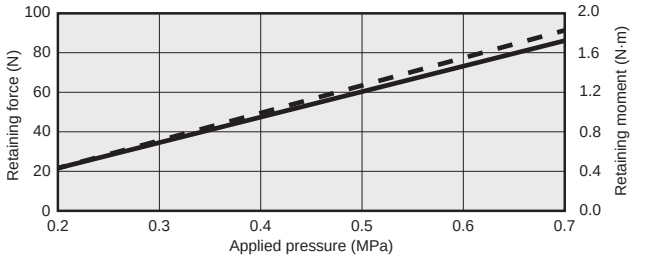

CPL34S
CPL54S

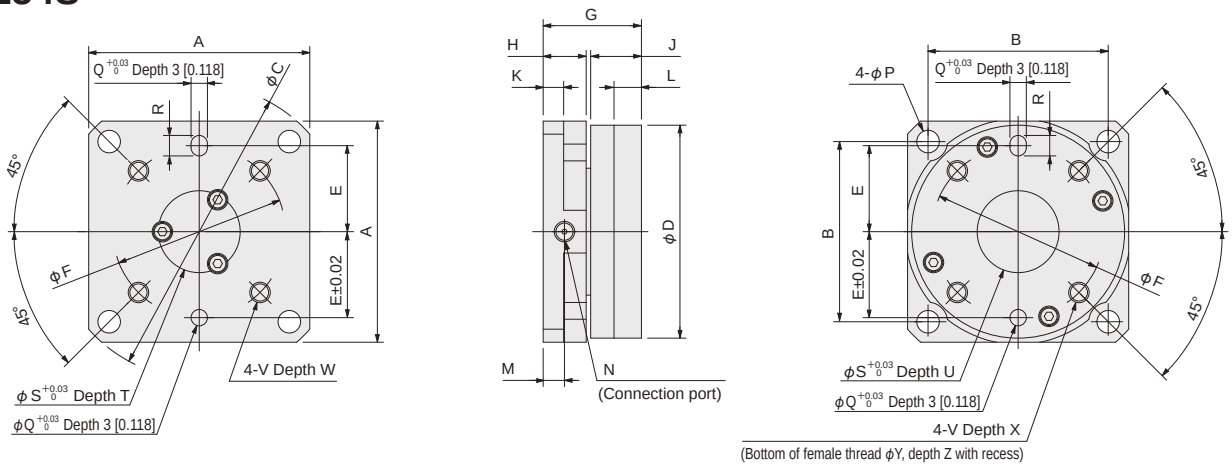

Model \ Code	A	B	C	D	E	F	G	H	J	K	L	M	N	P	Q	R
CPL34S	34 [1.339]	28 [1.102]	46 [1.811]	32 [1.260]	13 [0.512]	26 [1.024]	19 [0.748]	8.9 [0.350]	9.2 [0.399]	4 [0.157]	4.8 [0.189]	4.9 [0.193]	M3×0.5 [0.020]	3.4 [0.134]	3 [0.118]	4 [0.157]
CPL54S	54 [2.126]	44 [1.732]	72 [2.835]	52 [2.047]	21 [0.827]	42 [1.654]	24 [0.945]	10.5 [0.413]	12.4 [0.488]	5 [0.197]	6.7 [0.264]	5.2 [0.205]	M5×0.8 [0.031]	5.5 [0.217]	4 [0.157]	5 [0.197]

Model \ Code	S	T	U	V	W	X	Y	Z
CPL34S	12 [0.472]	2 [0.079]	1.5 [0.059]	M3×0.5 [0.020]	6 [0.236]	4.8 [0.189]	4 [0.157]	1 [0.039]
CPL54S	20 [0.787]	2.5 [0.098]	1.5 [0.059]	M5×0.8 [0.031]	7 [0.276]	6.7 [0.264]	6 [0.236]	1.5 [0.059]

CPL70S
CPL90S

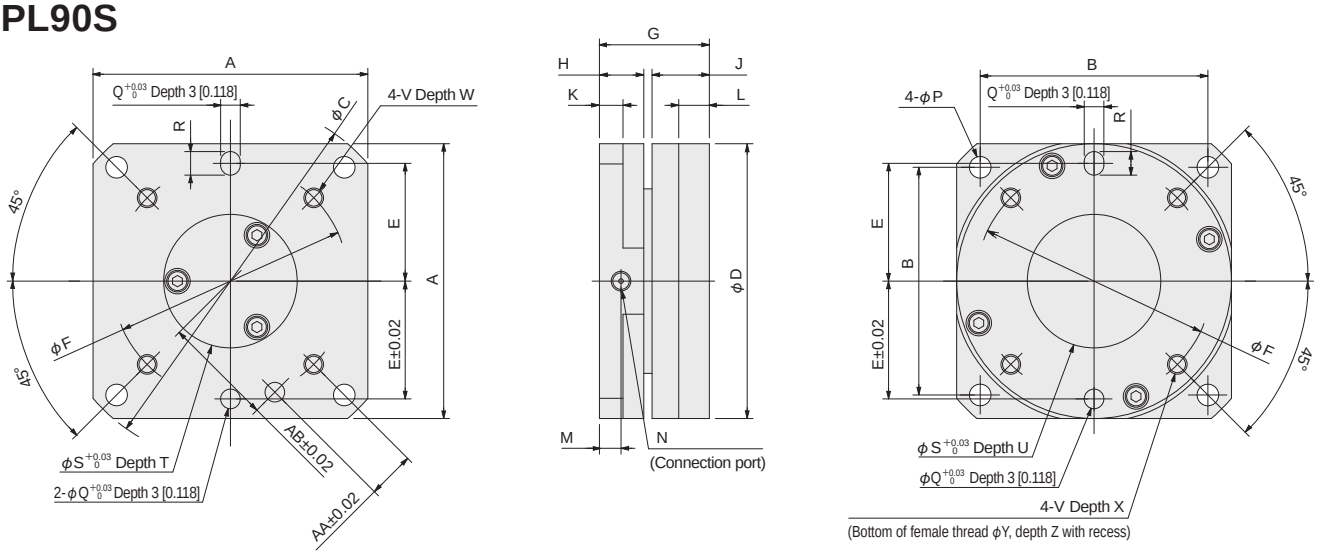

Model \ Code	A	B	C	D	E	F	G	H	J	K	L	M	N	P	Q	R
CPL70S	70 [2.756]	58 [2.283]	92 [3.622]	70 [2.756]	30 [1.181]	60 [2.362]	28 [1.110]	11.3 [0.445]	14.6 [0.575]	6 [0.236]	7.8 [0.307]	5.5 [0.217]	M5×0.8 [0.031]	5.5 [0.217]	5 [0.197]	6 [0.236]
CPL90S	90 [3.543]	74 [2.913]	116 [4.600]	90 [3.543]	40 [1.575]	80 [3.150]	32 [1.260]	12.8 [0.504]	17 [0.669]	6 [0.236]	9.5 [0.374]	5.6 [0.220]	M5×0.8 [0.031]	6.6 [0.260]	6 [0.236]	7 [0.276]

Model \ Code	S	T	U	V	W	X	Y	Z	AA	AB
CPL70S	34 [1.339]	2.5 [0.098]	1.5 [0.059]	M5×0.8 [0.031]	8 [0.315]	7.8 [0.307]	7 [0.276]	1.5 [0.059]	12 [0.472]	28 [1.102]
CPL90S	50 [1.969]	2.5 [0.098]	1.5 [0.059]	M6×1 [0.039]	9 [0.354]	9.5 [0.374]	7 [0.276]	2 [0.079]	12 [0.472]	38 [1.496]

Compliance Light

Specifications of the improved retaining force Swing type

Specifications

Item		Basic type	CPLH34S	CPLH34S-N	CPLH54S	CPLH54S-N	CPLH70S	CPLH70S-N	CPLH90S	CPLH90S-N
Bore size		mm [in.]	16 [0.630]		25 [0.984]		40 [1.575]		50 [1.969]	
Dimensions		mm [in.]	□34 [□1.339]		□54 [□2.126]		□70 [□2.756]		□90 [□3.543]	
Height		mm [in.]	26 [1.024]		33 [1.299]		39 [1.535]		45 [1.772]	
Mass		g [oz.]	65 [2.29]		200 [7.05]		400 [14.11]		750 [26.46]	
Operating type			Single acting type							
Media			Air							
Operating pressure range		MPa [psi.]	0.2 to 0.7 [29.000 to 101.500]							
Proof pressure		MPa [psi.]	1.05 [152.250]							
Operating temperature range		°C [°F]	0 to 60 [0 to 140.000]							
Diameter of connection port		mm [in.]	M3×0.5 [0.020]		M5×0.8 [0.031]					
Lubrication	Cylinder part		Not required							
	Sliding part		No							
Maximum load capacity		kg [lb.]	1 [2.205]		2 [4.410]		4 [8.820]		6 [13.230]	
Movement range	X − Y	mm [in.]	±0.5 [0.020]		±1 [0.039]		±1.5 [0.059]		±2 [0.079]	
	Z	mm [in.]	−0.5 [−0.020]		−0.5 [−0.02]		−0.7 [−0.028]		−1.0 [−0.039]	
	θ (twisting)	°	±3		±4					
	α (inclination) °	Swing angle	±0.5		±1					
		Incline angle	±1.4		±0.7					
Centripetal force (when movement is 0.5 mm) Note1		N [lbf.]	3 [0.674]	0 [0]	5 [1.124]	0 [0]	5 [1.124]	0 [0]	3 [0.674]	0 [0]
Repeatability Note2 (in the direction of X and Y)	P=0.5MPa	mm [in.]	±0.05 [0.002]							
Repeatable angle accuracy Note3 (in the direction of θ)	P=0.5MPa	Degrees	±0.2 [0.008] (bidirectional repeatability)		±0.1 [0.004] (bidirectional repeatability)					
Withstand load Note5	Pushing direction	N [lbf.]	1580 [355]		2840 [638]		5150 [1158]		6670 [1499]	
	Pulling direction	N [lbf.]	840 [188.8]		1480 [333]		2980 [670]		4880 [1097]	

Note 1: Centripetal force: Indicates the force, with no load and no air pressure applied, that maintains the center position via the restraining ring.
Note 2: Repeatability: The maximum deviation of the position at which the plate, with no load and no air pressure applied, stops when air has been applied after moving it in any direction. For details, see page ⑦.
Note 3: Repeatable angle accuracy: bidirectional repeatability
The maximum deviation of the angle at which the plate, with no load and no air pressure applied, stops when air has been applied after rotating laterally. For details, see page ⑦.
Note 4: The center position when air pressure is applied to the plate and the center position when air pressure is not applied may be misaligned.
Note 5: When press fitting, use a load of 1/10 or less of the value for the allowable load. For details, see page ⑦.
Note 6: Mount the product so that the center of gravity of the mounted load falls within the plate's external diameter, and do not operate with an overhanging load.
Note 7: For the Handling Instructions and Precautions, see page ⑦.

Order Codes

• Specifications of the improved retaining force, swing type

CPLH □ **S** - □

Compliance Light (Specifications of the improved retaining force)

Size
34: □34 mm [□1.339 in.]
54: □54 mm [□2.126 in.]
70: □70 mm [□2.756 in.]
90: □90 mm [□3.543 in.]

Direction of movement
S: twisting movement

Centripetal force
Blank: with centripetal force
N : without centripetal force

Direction of movement

• X, Y, Z, θ , and α axes

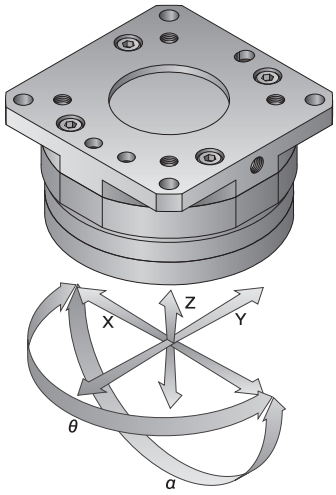

Inner construction

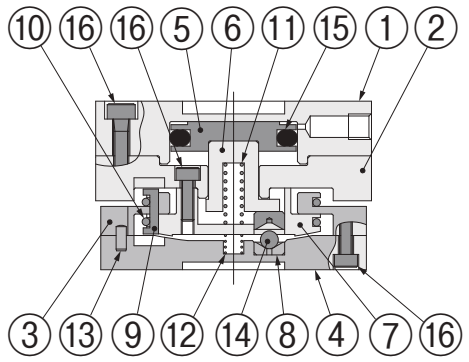

Major parts and materials

No.	Name \ Model	CPLH34S	CPLH54S	CPLH70S	CPLH90S
①	Unit	Aluminum alloy (electroless nickel plated)			
②	Unit connection	Aluminum alloy (electroless nickel plated)			
③	Frame	Aluminum alloy (electroless nickel plated)			
④	Plate	Aluminum alloy (electroless nickel plated)			
⑤	Piston	Aluminum alloy (anodized)			
⑥	Lock piston	Steel (electroless nickel plated)			
⑦	Disk	Aluminum alloy (special anti-abrasion treated)			
⑧	Spacer	Stainless steel (heat-treated)			
⑨	Alignment pin	Stainless steel (heat-treated)			
⑩	Restraining ring	Stainless steel			
⑪	Spring	Piano wire			
⑫	Spring	Piano wire			
⑬	Parallel pin	Stainless steel			
⑭	Steel ball	Steel			
⑮	Seal	Synthetic rubber (NBR)			
⑯	Bolt	Stainless steel			

Graph (reference values)

• Centripetal force

* Centripetal force: Force that maintains the center position via the restraining ring in a condition in which no load and no air pressure is applied.

1N = 0.225 lbf.
1mm = 0.039 in.
1 MPa = 145.000 psi.

CPLH34S

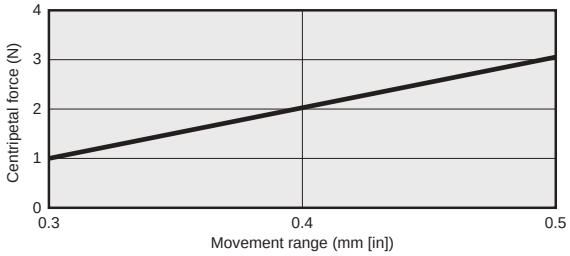

CPLH54S

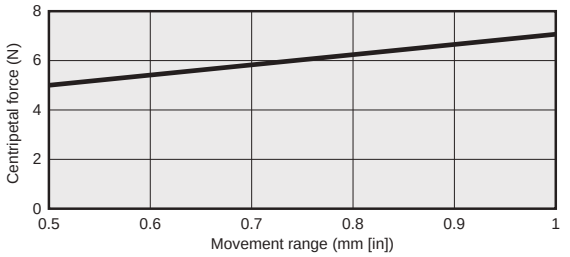

CPLH70S

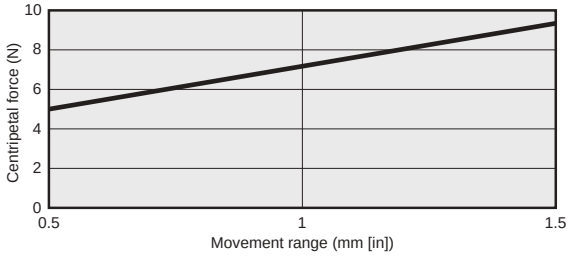

CPLH90S

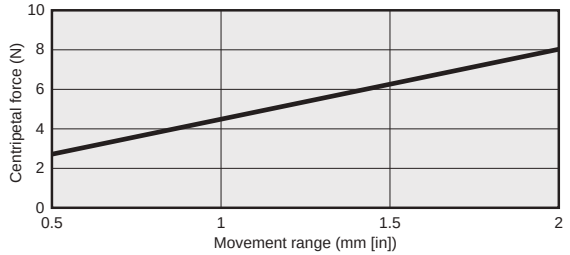

• Retaining force, Retaining moment

Retaining force
Retaining moment

* Retaining force: Force that maintains the center position of the X and Y directions when air pressure is applied
* Retaining moment: Force that maintains the center position of the θ direction when air pressure is applied

CPLH34S

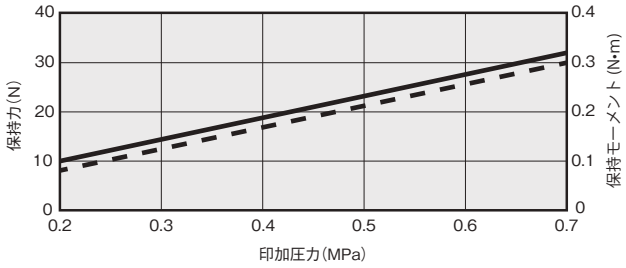

CPLH54S

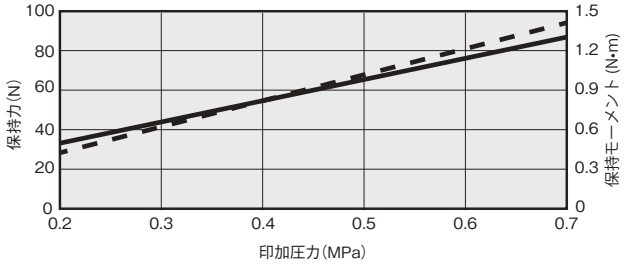

CPLH70S

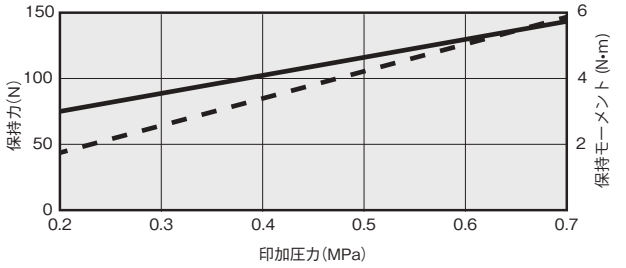

CPLH90S

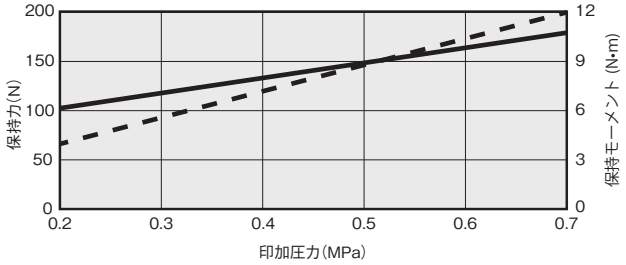

CPLH34S
CPLH54S

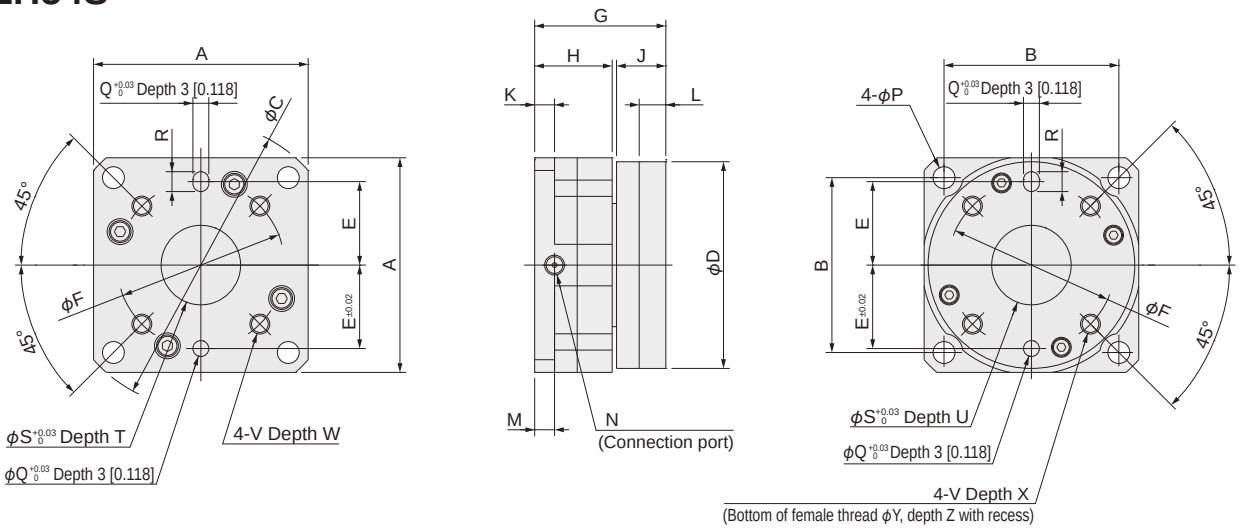

Model \ Code	A	B	C	D	E	F	G	H	J	K	L	M	N	P	Q	R
CPLH34S	34 [1.339]	28 [1.102]	46 [1.811]	32 [1.260]	13 [0.512]	26 [1.024]	26 [1.024]	15.9 [0.626]	9.2 [0.399]	4 [0.157]	4.8 [0.189]	4.8 [0.189]	M3×0.5 [0.020]	3.4 [0.134]	3 [0.118]	4 [0.157]
CPLH54S	54 [2.126]	44 [1.732]	72 [2.835]	52 [2.047]	21 [0.827]	42 [1.654]	33 [1.299]	19.5 [0.768]	12.4 [0.488]	5 [0.197]	6.7 [0.264]	5 [0.197]	M5×0.8 [0.031]	5.5 [0.217]	4 [0.157]	5 [0.197]

Model \ Code	S	T	U	V	W	X	Y	Z
CPLH34S	12 [0.472]	2 [0.079]	1.5 [0.059]	M3×0.5 [0.020]	6 [0.236]	4.8 [0.189]	4 [0.157]	1 [0.039]
CPLH54S	20 [0.787]	2.5 [0.098]	1.5 [0.059]	M5×0.8 [0.031]	10 [0.394]	6.7 [0.264]	6 [0.236]	1.5 [0.059]

CPLH70S
CPLH90S

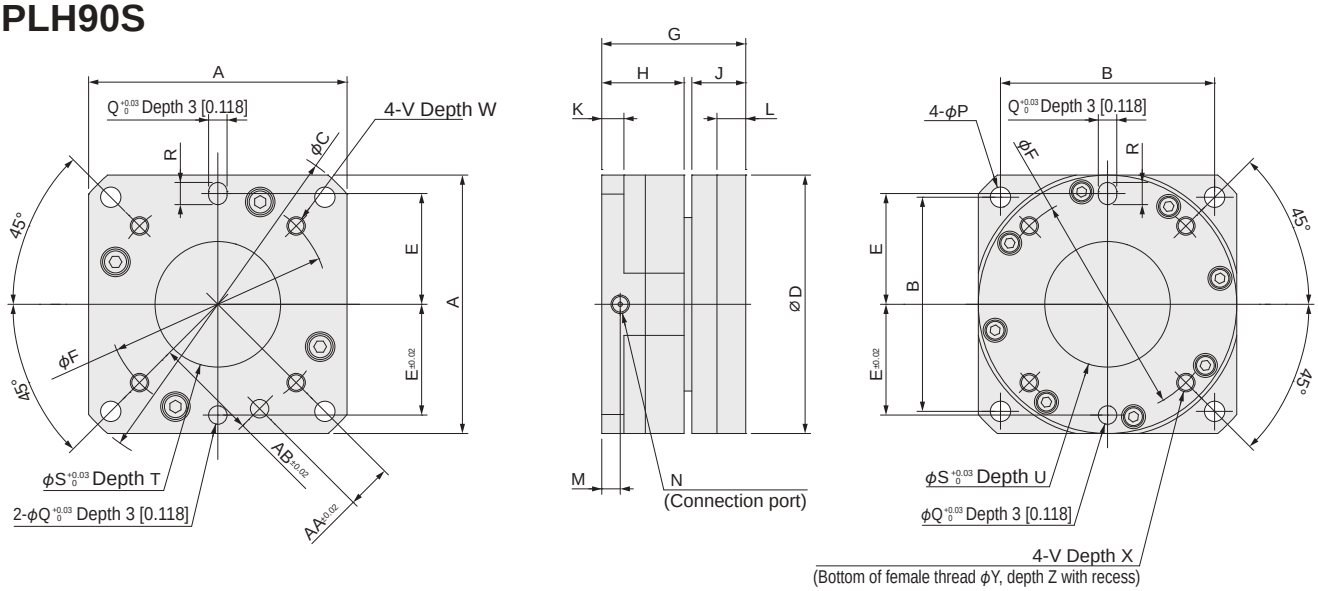

Model \ Code	A	B	C	D	E	F	G	H	J	K	L	M	N	P	Q	R
CPLH70S	70 [2.756]	58 [2.283]	92 [3.622]	70 [2.756]	30 [1.181]	60 [2.362]	39 [1.535]	22.3 [0.878]	14.6 [0.575]	6 [0.236]	7.8 [0.307]	5 [0.197]	M5×0.8 [0.031]	5.5 [0.217]	5 [0.197]	6 [0.236]
CPLH90S	90 [3.543]	74 [2.913]	116 [4.600]	90 [3.543]	40 [1.575]	80 [3.150]	45 [1.772]	25.8 [1.016]	17 [0.669]	6 [0.236]	9.5 [0.374]	5.5 [0.217]	M5×0.8 [0.031]	6.6 [0.260]	6 [0.236]	7 [0.276]

Model \ Code	S	T	U	V	W	X	Y	Z	AA	AB
CPLH70S	34 [1.339]	2.5 [0.098]	1.5 [0.059]	M5×0.8 [0.031]	11 [0.433]	7.8 [0.307]	7 [0.276]	1.5 [0.059]	12 [0.472]	28 [1.102]
CPLH90S	50 [1.969]	2.5 [0.098]	1.5 [0.059]	M6×1 [0.039]	14 [0.551]	9.5 [0.374]	7 [0.276]	2 [0.079]	12 [0.472]	38 [1.496]

Compliance Light

Clean system specifications Swing type

Specifications

Item		Basic type	CS-CPL34S	CS-CPL34S-N	CS-CPL54S	CS-CPL54S-N	CS-CPL70S	CS-CPL70S-N	CS-CPL90S	CS-CPL90S-N
Bore size		mm [in.]	6 [0.236]		10 [0.394]		16 [0.630]		20 [0.787]	
Dimensions		mm [in.]	□34 [□1.339]		□54 [□2.126]		□70 [□2.756]		□90 [□3.543]	
Height		mm [in.]	19 [0.748]		24 [0.945]		28 [1.102]		32 [1.260]	
Mass		g [oz.]	43 [1.517]		136 [4.8]		260 [9.2]		490 [17.3]	
Operating type			Single acting type							
Media			Air							
Operating pressure range		MPa [psi.]	0.2 to 0.7 [29.000 to 101.500]							
Proof pressure		MPa [psi.]	1.05 [152.250]							
Operating temperature range		°C [°F]	0 to 60 [0 to 140.000]							
Diameter of connection port		mm [in.]	M3×0.5 [0.020]		M5×0.8 [0.031]					
Lubrication	Cylinder part		No							
	Sliding part		No							
Maximum load capacity		kg [lb.]	1 [2.205]		2 [4.410]		4 [8.820]		6 [13.230]	
Movement range	X − Y	mm [in.]	±0.5 [0.020]		±1 [0.039]		±1.5 [0.059]		±2 [0.079]	
	Z	mm [in.]	−0.5 [−0.020]		−0.5 [−0.02]		−0.7 [−0.028]		−1.0 [−0.039]	
	θ (twisting)	°	±3		±4					
	α (inclination) °	Swing angle	±0.5		±1					
		Incline angle	±1.4		±0.7					
Centripetal force (when movement is 0.5 mm) Note1		N [lbf.]	3 [0.674]	0 [0]	5 [1.124]	0 [0]	5 [1.124]	0 [0]	3 [0.674]	0 [0]
Repeatability Note2 (in the direction of X and Y)	P=0.5MPa	mm [in.]	±0.05 [0.002]							
Repeatable angle accuracy Note3 (in the direction of θ)	P=0.5MPa	Degrees	±0.3 [0.012] (bidirectional repeatability)		±0.2 [0.008] (bidirectional repeatability)					
Withstand load Note5	Pushing direction	N [lbf.]	1580 [355]		2840 [638]		5150 [1158]		6670 [1499]	
	Pulling direction	N [lbf.]	840 [188.8]		1480 [333]		2980 [670]		4880 [1097]	
Dust collection port		mm [in.]	M3×0.5 [0.020]		M5×0.8 [0.031]					
Cleanliness			Class 5 equivalent (When vacuum sucked via the dust collection port. Based on Koganei standards.)							

Note 1: Centripetal force: Indicates the force, with no load and no air pressure applied, that maintains the center position via the restraining ring.
Note 2: Repeatability: The maximum deviation of the position at which the plate, with no load and no air pressure applied, stops when air has been applied after moving it in any direction. For details, see page ⑦.
Note 3: Repeatable angle accuracy: bidirectional repeatability
The maximum deviation of the angle at which the plate, with no load and no air pressure applied, stops when air has been applied after rotating laterally. For details, see page ⑦.
Note 4: The center position when air pressure is applied to the plate and the center position when air pressure is not applied may be misaligned.
Note 5: When press fitting, use a load of 1/10 or less of the value for the allowable load. For details, see page ⑦.
Note 6: Mount the product so that the center of gravity of the mounted load falls within the plate's external diameter, and do not operate with an overhanging load.
Note 7: For the Handling Instructions and Precautions, see page ⑦.

Order Codes

• Clean system specifications, swing type

CS-CPL □ **S** - □

Compliance Light (Clean system specifications)

Size
34: □34 mm [□1.339 in.]
54: □54 mm [□2.126 in.]
70: □70 mm [□2.756 in.]
90: □90 mm [□3.543 in.]

Direction of movement
S: twisting movement

Centripetal force
Blank: with centripetal force
N : without centripetal force

Direction of movement

• X, Y, Z, θ , and α axes

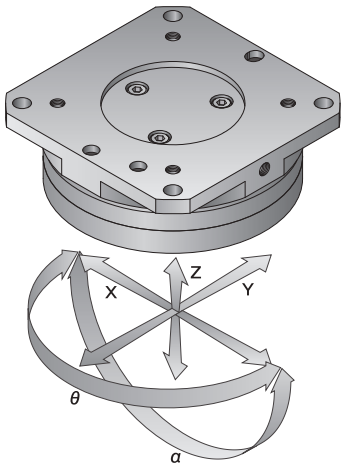

Inner construction

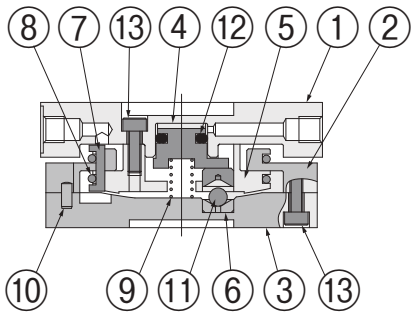

Major parts and materials

No.	Name \ Model	CS-CPL34S	CS-CPL54S	CS-CPL70S	CS-CPL90S
①	Unit	Aluminum alloy (electroless nickel plated)			
②	Frame	Aluminum alloy (electroless nickel plated)			
③	Plate	Aluminum alloy (electroless nickel plated)			
④	Piston	Aluminum alloy (anodized)			
⑤	Disk	Aluminum alloy (special anti-abrasion treated)			
⑥	Spacer	Stainless steel (heat-treated)			
⑦	Alignment pin	Stainless steel (heat-treated)			
⑧	Restraining ring	Stainless steel			
⑨	Spring	Stainless steel	Piano wire		
⑩	Parallel pin	Stainless steel			
⑪	Steel ball	Steel			
⑫	Seal	Synthetic rubber (NBR)			
⑬	Bolt	Stainless steel			

Graph (reference values)

• Centripetal force

* Centripetal force: Force that maintains the center position via the restraining ring in a condition in which no load and no air pressure is applied.

1N = 0.225 lbf.
1mm = 0.039 in.
1 MPa = 145.000 psi.

CS-CPL34S

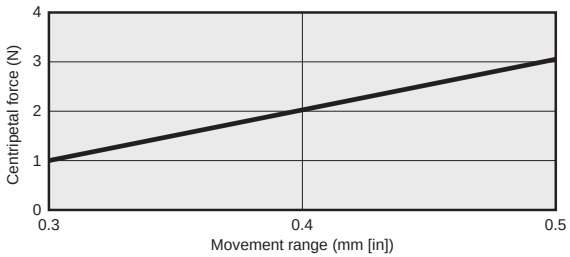

CS-CPL54S

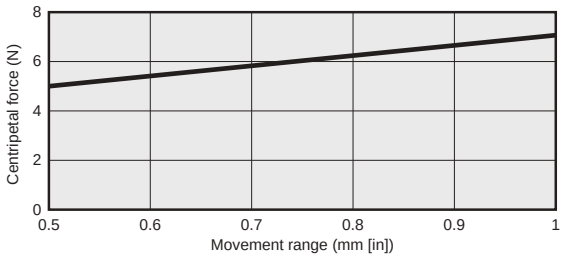

CS-CPL70S

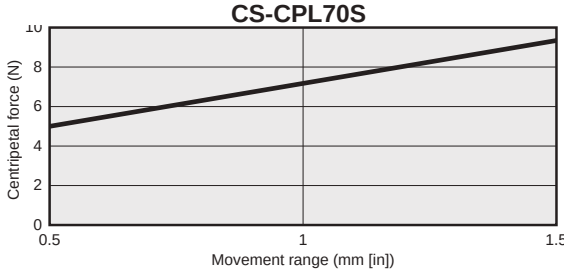

CS-CPL90S

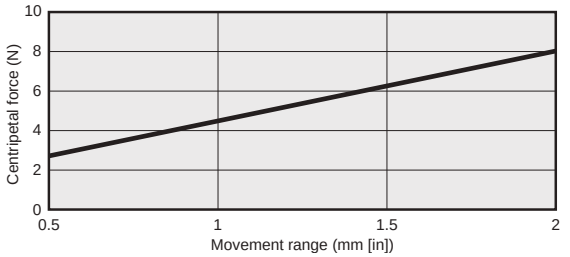

• Retaining force, Retaining moment

Retaining force
Retaining moment

* Retaining force: Force that maintains the center position of the X and Y directions when air pressure is applied
* Retaining moment: Force that maintains the center position of the θ direction when air pressure is applied

CS-CPL34S

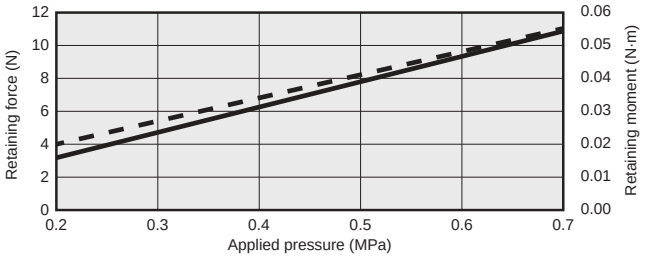

CS-CPL54S

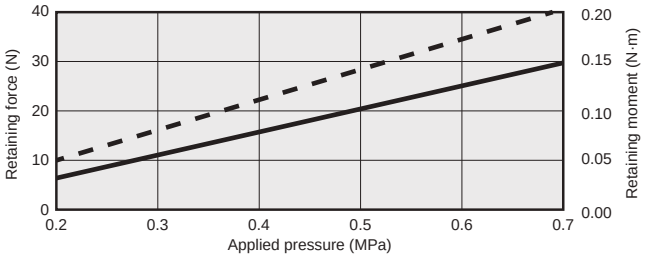

CS-CPL70S

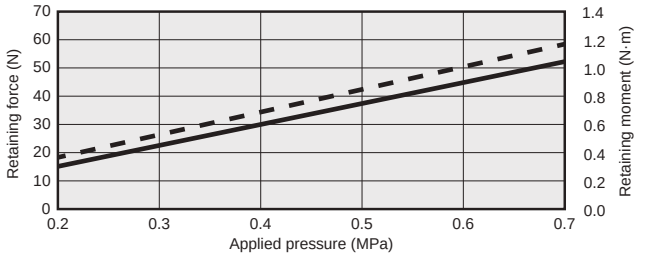

CS-CPL90S

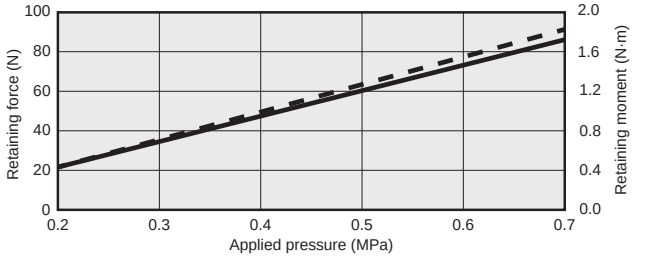

Dimensions (mm [in.])

CS-CPL34S
CS-CPL54S

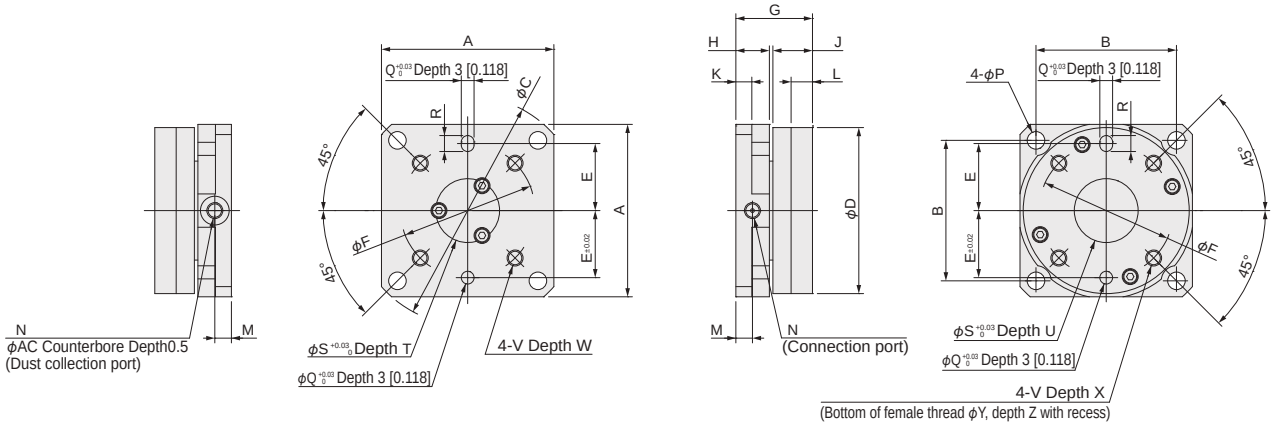

Model \ Code	A	B	C	D	E	F	G	H	J	K	L	M	N	P	Q	R
CS-CPL34S	34 [1.339]	28 [1.102]	46 [1.811]	32 [1.260]	13 [0.512]	26 [1.024]	19 [0.748]	8.9 [0.350]	9.2 [0.399]	4 [0.157]	4.8 [0.189]	4.9 [0.193]	M3×0.5 [0.020]	3.4 [0.134]	3 [0.118]	4 [0.157]
CS-CPL54S	54 [2.126]	44 [1.732]	72 [2.835]	52 [2.047]	21 [0.827]	42 [1.654]	24 [0.945]	10.5 [0.413]	12.4 [0.488]	5 [0.197]	6.7 [0.264]	5.2 [0.205]	M5×0.8 [0.031]	5.5 [0.217]	4 [0.157]	5 [0.197]

Model \ Code	S	T	U	V	W	X	Y	Z	AC
CS-CPL34S	12 [0.472]	2 [0.079]	1.5 [0.059]	M3×0.5 [0.020]	6 [0.236]	4.8 [0.189]	4 [0.157]	1 [0.039]	6 [0.236]
CS-CPL54S	20 [0.787]	2.5 [0.098]	1.5 [0.059]	M5×0.8 [0.031]	7 [0.276]	6.7 [0.264]	6 [0.236]	1.5 [0.059]	9 [0.354]

CS-CPL70S
CS-CPL90S

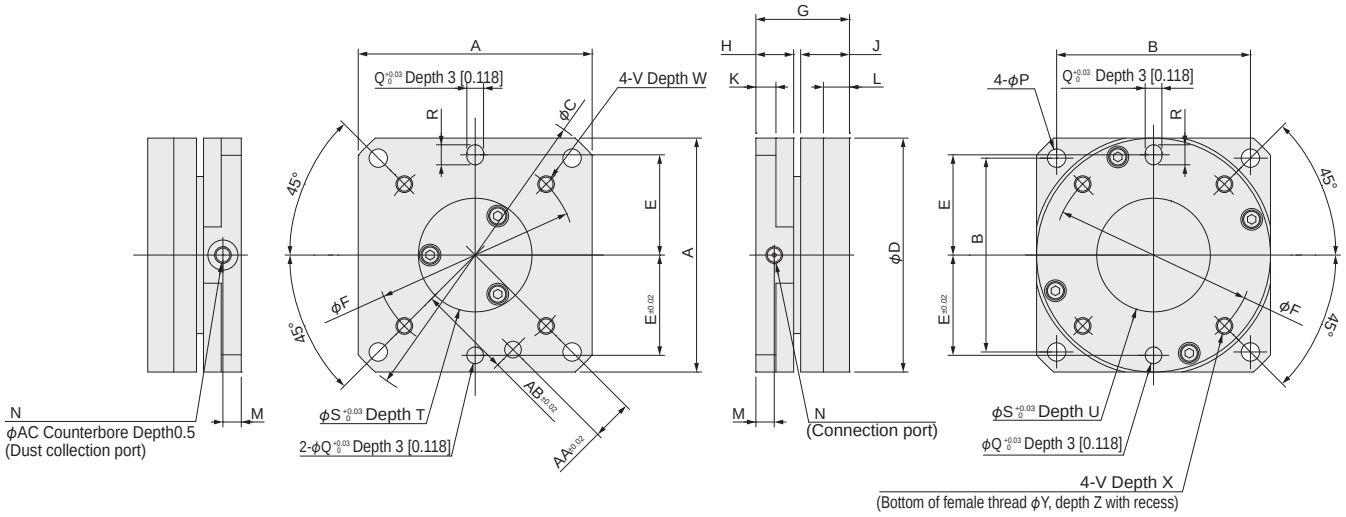

Model \ Code	A	B	C	D	E	F	G	H	J	K	L	M	N	P	Q	R
CS-CPL70S	70 [2.756]	58 [2.283]	92 [3.622]	70 [2.756]	30 [1.181]	60 [2.362]	28 [1.110]	11.3 [0.445]	14.6 [0.575]	6 [0.236]	7.8 [0.307]	5.5 [0.217]	M5×0.8 [0.031]	5.5 [0.217]	5 [0.197]	6 [0.236]
CS-CPL90S	90 [3.543]	74 [2.913]	116 [4.600]	90 [3.543]	40 [1.575]	80 [3.150]	32 [1.260]	12.8 [0.504]	17 [0.669]	6 [0.236]	9.5 [0.374	5.6 [0.220]	M5×0.8 [0.031]	6.6 [0.260]	6 [0.236]	7 [0.276]

Model \ Code	S	T	U	V	W	X	Y	Z	AA	AB	AC
CS-CPL70S	34 [1.339]	2.5 [0.098]	1.5 [0.059]	M5×0.8 [0.031]	8 [0.315]	7.8 [0.307]	7 [0.276]	1.5 [0.059]	12 [0.472]	28 [1.102]	9 [0.354]
CS-CPL90S	50 [1.969]	2.5 [0.098]	1.5 [0.059]	M6×1 [0.039]	9 [0.354]	9.5 [0.374]	7 [0.276]	2 [0.079]	12 [0.472]	38 [1.496]	9 [0.354]

Limited Warranty

KOGANEI CORP. warrants its products to be free from defects in material and workmanship subject to the following provisions.

Warranty Period The warranty period is 180 days from the date of delivery.

Koganei Responsibility If a defect in material or workmanship is found during the warranty period, KOGANEI CORP. will replace any part proved defective under normal use free of charge and will provide the service necessary to replace such a part.

Limitations

- This warranty is in lieu of all other warranties, expressed or implied, and is limited to the original cost of the product and shall not include any transportation fee, the cost of installation or any liability for direct, indirect or consequential damage or delay resulting from the defects.
- KOGANEI CORP. shall in no way be liable or responsible for injuries or damage to persons or property arising out of the use or operation of the manufacturer's product.
- This warranty shall be void if the engineered safety devices are removed, made inoperative or not periodically checked for proper functioning.
- Any operation beyond the rated capacity, any improper use or application, or any improper installation of the product, or any substitution upon it with parts not furnished or approved by KOGANEI CORP., shall void this warranty.
- This warranty covers only such items supplied by KOGANEI CORP. The products of other manufacturers are covered only by such warranties made by those original manufacturers, even though such items may have been included as the components.

The specifications are subject to change without notice.

URL http://www.koganei.co.jp

E-mail: overseas@koganei.co.jp

KOGANEI

KOGANEI CORPORATION

OVERSEAS DEPARTMENT
3-11-28, Midori-cho, Koganei City, Tokyo 184-8533, Japan
Tel: 81-42-383-7271 Fax: 81-42-383-7276

KOGANEI International America, Inc.
48860 Milmont Drive, Suite 108C Fremont, CA 94538, U.S.A
TEL:(+1)510-744-1626 FAX:(+1)510-744-1676

SHANGHAI KOGANEI INTERNATIONAL TRADING CORPORATION
RM2606-2607, Tongda Venture Building NO.1 Lane 600, Tianshan Road, Shanghai, China
TEL:(+86)021-6145-7313 FAX:(+86)021-6145-7323

TAIWAN KOGANEI TRADING CO.,LTD
Rm.2,16F.,No88,Sec.2,zhongxiao E.Rd.,ZhongZheng Dist.,Taipei City10050,Taiwan(ROC)
TEL:(+886)02-2393-2717 FAX:(+886)02-2393-2719

KOGANEI KOREA CO., LTD
A-3001, Heungdeok IT Valley Bldg., Heungkeok 1-ro, 13, Giheung-gu, Yongin-si, Gyeonggi-do, 446-908, KOREA
TEL:(+82)31-246-0414 FAX:(+82)31-246-0415

KOGANEI (THAILAND) CO.,LTD
555 Rasa Tower I, Unit1207, 1202, 12th floor, Phaholyothin Road, Chatuchak, Chatuchak, Bangkok 10900 Thailand
TEL:(+66)02-513-1228 FAX:(+66)02-513-1232

KOGANEI ASIA PTE. LTD.
69 Ubi Road 1, #05-18 Oxley Bizhub Singapore 408731
TEL:(+65)6293-4512 FAX:(+65)6293-4513

9/'19 AB

©KOGANEI CORP. PRINTED IN JAPAN